Chapter 3
3D Tunnel Connection

Workflow

: Geometry > Point & Curve > Rectangle	7
: Geometry > Point & Curve > Tunnel	8
: Geometry > Transform > Translate	8
: Geometry > Protrude > Extrude	10
: Geometry > Surface & Solid > Cylinder	11
: Geometry > Boolean > Solid	11
: Geometry > Divide > Solid	12
: Geometry > Point & Curve > Rectangle	12
: Geometry > Transform > Translate	13
: Geometry > Divide > Solid	13
: Geometry > Point & Curve > Line	18
: Geometry > Transform > Rotate	18
: Mesh > Control > Size Ctrl	19
: Mesh > Generate > 3D	20
: Mesh > Element > Extract	21
: Mesh > Element > Delete	21
: Mesh > Generate > 1D	22

Chapter 3

3D Tunnel Connection

: Mesh > Transform > Trans.	22
: Mesh > Mesh Set > Rename	25
: Mesh > Element > Parameters	26
: Static/Slope Analysis > Load > Self Weight	27
: Static/Slope Analysis > Boundary > Constraint	27
: Static/Slope Analysis > Construction Stage > Stage Set	27
: Static/Slope Analysis > Construction Stage > Stage Wizard	28
: Analysis > Analysis Case > General	30
: Analysis > Analysis > Perform	30

3D Tunnel Connection

Section 1
Overview

1.1 Learning Purpose

The purpose of this analysis is to see the effect of tunnel construction on surrounding facilities and to review the stability of support structures in advance. It is possible to choose the solution types depend on whether it's 2D analysis or 3D analysis. If you are processing 2D analysis, you have to search for the method to consider 3D ground behavior due to tunnel excavation. Sometimes it is very difficult to process the analysis in 2D, for example junctions which connect tunnel branches, ventilating holes and vertical shafts together need to be modeled in 3D. In this case you should process 3D analysis to analyze the ground behavior.

▶Modeling tunnel connection

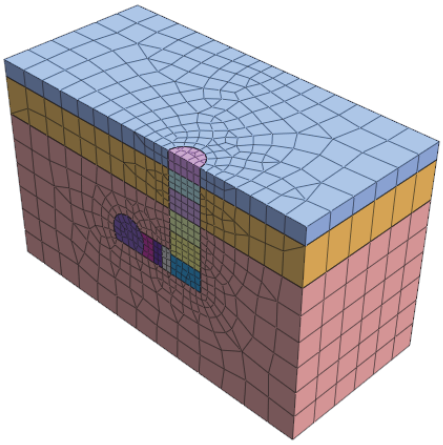

In this tutorial, the following main concepts will be explained:

- Tunnel modeling
- Boolean geometry
- Generate and manage mesh sets
- Setting construction stages
- Results – Plotting graphs and tables for construction stage analysis results

1.2 Model and Analysis Summary

This model has various layers of strata with vertical shaft, main tunnel and passageway. Since this model is symmetry, generate half of the entire model. Then divide it properly and process construction stage analysis. Define construction stages to Vertical shaft excavation -> Passageway installation -> Main tunnel excavation.

▶Modeling diagram

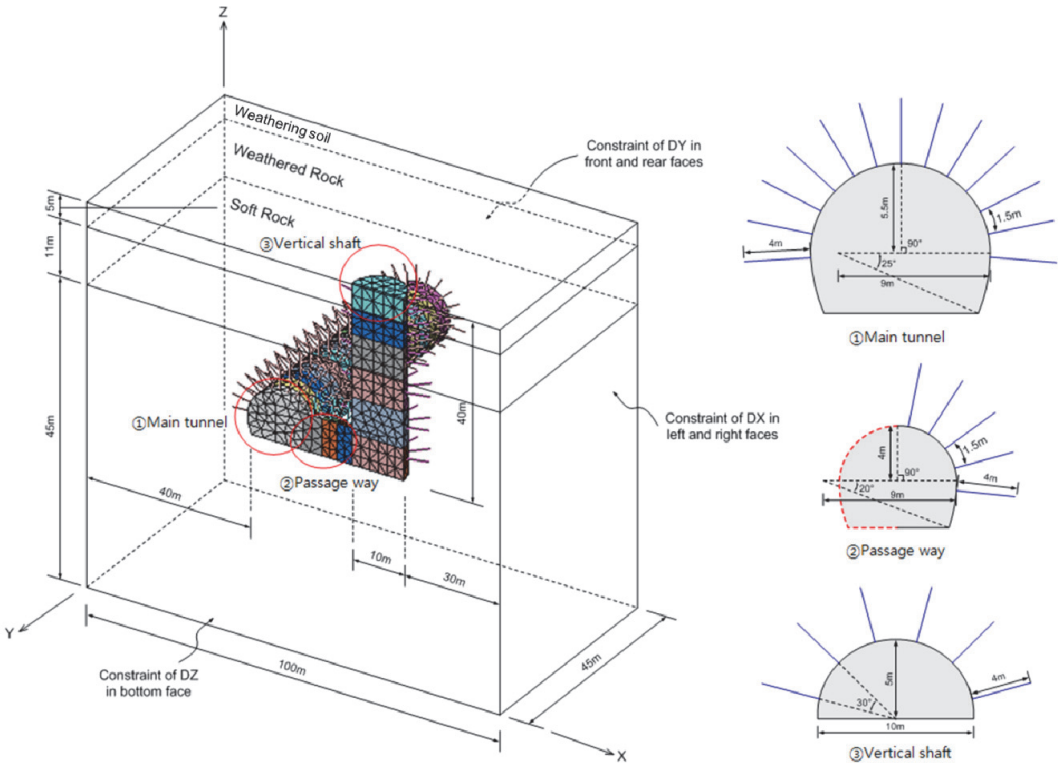

Section 2

Analysis Setting

[Open the attached start file (03_3DTunnel_start)]

∗ : Analysis > Analysis Case > Setting

- Set model type, gravity direction, initial parameters and unit system for the analysis. The unit system can be changed whenever you want during the modeling process and after performing the analysis. The input parameters will be automatically converted by the right unit system.
- This tutorial is a 3D model with gravity in Z direction and using SI unit system (kN, m).

▶Analysis Setting

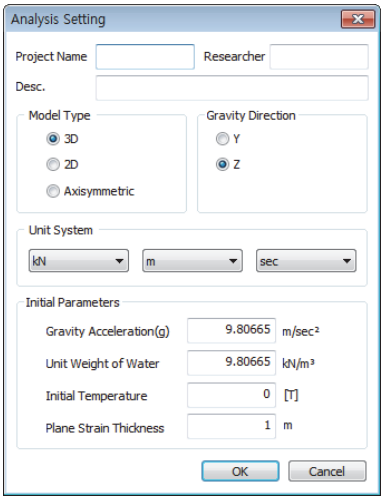

Section 3
Define Material and Property

3.1 Define Ground and Structural Materials

For material modal type, apply 'Mohr-Coulomb' for the ground and 'Elastic' for the structure, which doesn't consider Nonlinearity.

Ground and structure materials are defined as below:

▶Table. Ground material

[Unit : kN, m]

Name	Soft rock	Weathered rock	Weathering soil
Material	Isotropic	Isotropic	Isotropic
Model type	Mohr-Coulomb	Mohr-Coulomb	Mohr-Coulomb
General			
Elastic Modulus(E)	2.0E+06	5.0E+05	5.0E+04
Poisson's Ratio(v)	0.25	0.30	0.30
Unit Weight(r)	25	23	18
Ko	1.0	0.7	0.5
Porous			
Unit Weight(Saturated)	25	23	18
Initial Void Ratio(eo)	0.5	0.5	0.5
Drained Parameters	Drained	Drained	Drained
Non-Linear			
Cohesion(C)	200	20	20
Friction Angle	35	33	30

▶Define ground material - General
▶▶ Define ground material - Porous
▶▶▶ Define ground material – Nonlinear

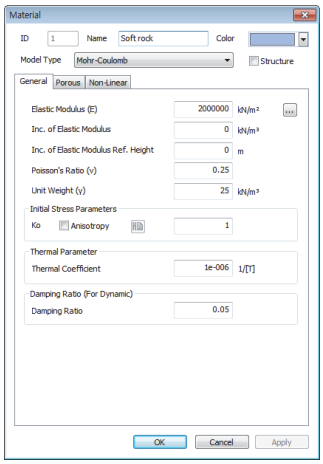

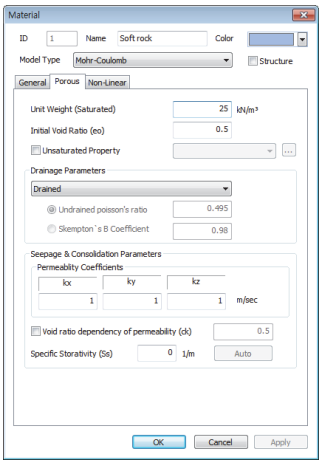

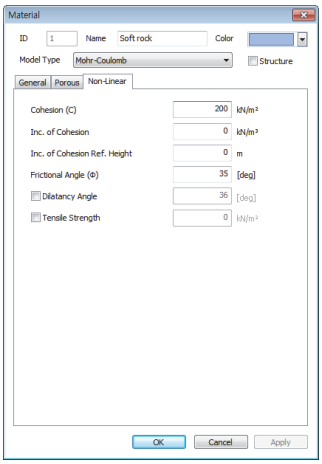

▶Table. Structure material

[Unit : kN, m]

Name	Conc Panel	Shotcrete	rockbolt
Material	Isotropic	Isotropic	Isotropic
Model type	Elastic	Elastic	Elastic
Elastic Modulus(E)	2.0E+07	1.5E+07	2.10E+08
Poisson's Ratio(v)	0.2	0.2	0.3
Unit Weight(r)	25	24	78.5

▶Define Structure material

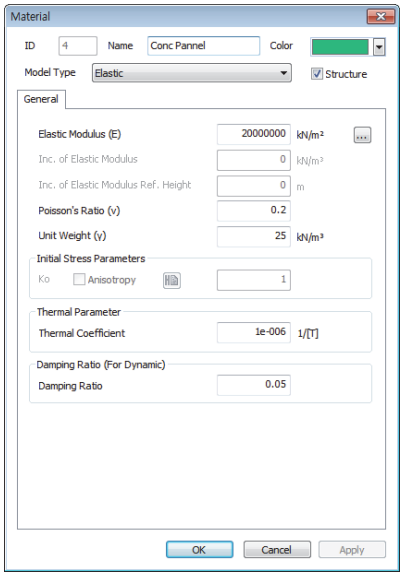

3.2 Define Properties

Properties represent physical attributes of the meshes and will be assigned to mesh sets during mesh generation. While defining ground and structure properties, firstly choose the material to be used. And for structure properties, structure types and cross-section shapes (cross-section stiffness) should be further defined.

Use 'Plate' element for continuous wall in 3D model. And for rockbolt which is 1D element, use 'Embedded Truss' element. Such as 'Truss' element, 'Embedded Truss' element only bears axial force, but there is a convenience to use it because you don't need to create shared nodes with the ground. Since it has to be located inside of the ground, it is mainly used to model rockbolts, nails, and anchors etc.

The material properties have been defined as below:

▶Table. Ground property

[Unit : KN, m]

Name	Soft rock	Weathered rock	Weathering soil
Type	3D	3D	3D
Material	Soft rock	Weathered rock	Weathering soil

▶Define ground property

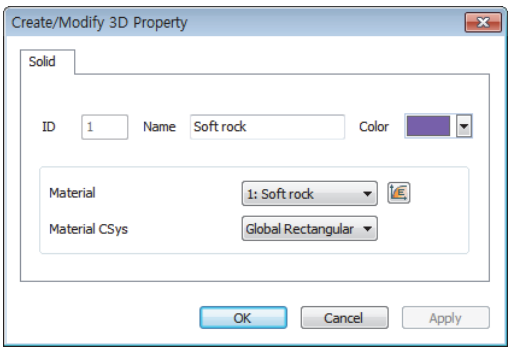

The properties for each structure property are defined as below. After setting the section shape, the section rigidly is automatically calculated.

▶Structure property

[Unit : kN, m]

Name	Conc Panel	Main_Passageway S/C	Vertical shaft S/C	Rockbolt
Type	2D	2D	2D	1D
Model type	Shell	Shell	Shell	Embedded Truss
Material	C/P	S/C	S/C	Rockbolt
Spacing	-			-
Section shape	-			Solid Round
Section Thickness	TH=0.3	TH=0.15	TH=0.2	D=0.025

▶Define structure property-Conc Panel
▶▶Define structure property-Main/Passageway S/C
▶▶▶Define structure property-Vertical shaft S/C

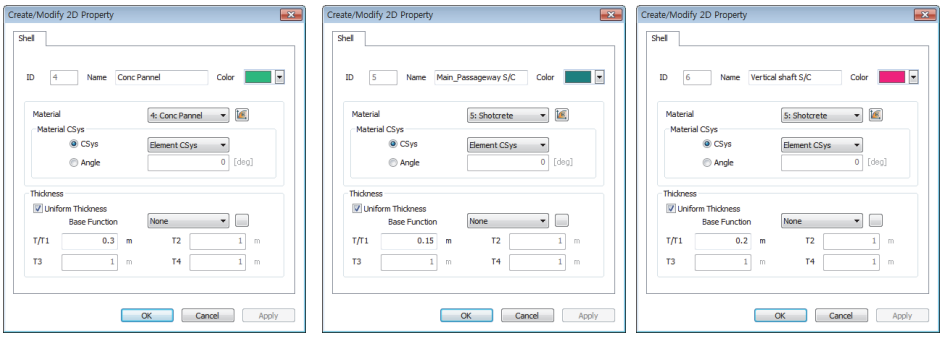

▶Define structure property (rockbolt)
▶▶Define structure property(Section shape)

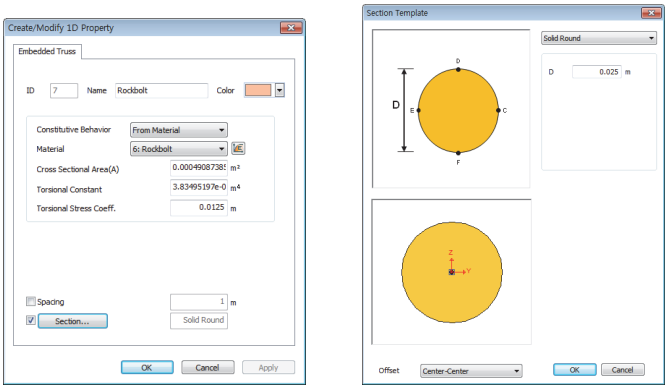

Section 4
Modeling

This tutorial focus on tunnel geometry modeling, generating and managing mesh set through Boolean operation, setting construction stages, and analyzing results. You can start the tutorial by opening the start file in which basic materials and properties have already been predefined.

4.1. Modeling Geometry

In GTS NX, 2 types of coordinate system are used: Global coordinate system (GCS) and Work plane coordinate system (WCS).

GCS is a fixed coordinate system indicated in red(X axis), green(Y axis), and blue (Z axis) colors at the right bottom corner on the screen.
WCS is a coordinate system which locates at center of the working window and moves with the work plane. So if the work plane changes, WCS will also change. 3D absolute coordinates are necessary to locate geometry in the space, but practically relative coordinates are commonly used, for example to indicate length. You can process modeling by inputting 2D coordinates (XY plane in WCS) after moving the work plane to proper location.

Keep in mind that in case of inputting direction for extruding geometry or defining load/boundary conditions, it always follows Global coordinate system.

▶Global coordinate system(GCS) and Workplane coordinate system(WCS)

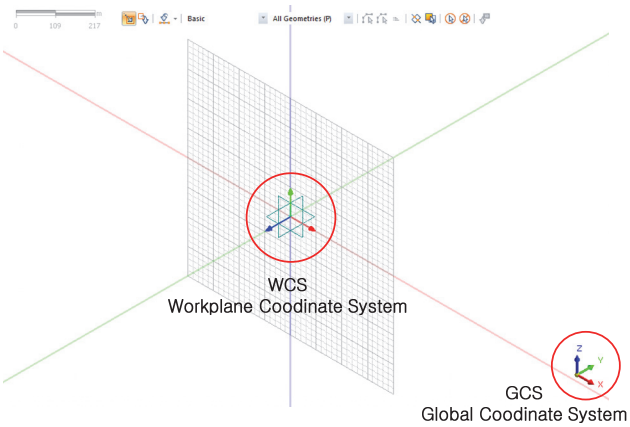

∗ : Geometry > Point & Curve > Rectangle

Create a rectangle for ground area.

- Click [Normal] in the view toolbar.
- Type '-45, -30' as the start location and press the [Enter] key.
- For the diagonally opposite corner type in '100, 61', then click on [OK].

* : Geometry > Point & Curve > Tunnel

Create geometry shape of main tunnel. Through Point & Curve > Tunnel, you can easily create tunnel and locate rockbolt.

- Select tunnel type to '3 Center Circle', and section type to 'Full'.
- Input '5.5', '90', '9', '25' at R1, A1, R2, A2.
- Check [Include Rock Bolts] option. And enter '13','4' in number, length of rock bolts.
- Input '1.5' at Arrangement > Tangential pitch.
- Check [Make wire] option. Name geometry set name to [Main tunnel].
- Click [OK].

▶Tunnel section(Main)

▶▶Generated tunnel section shape

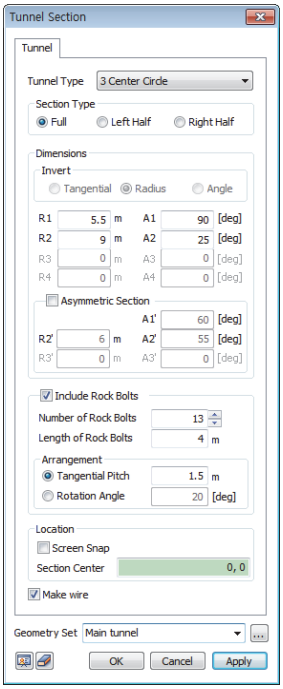

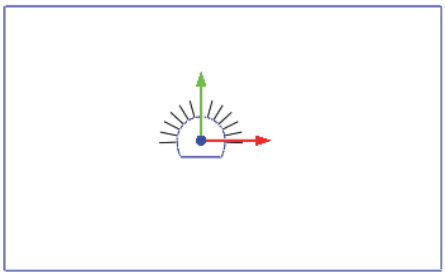

* : Geometry > Transform > Translate

This process transforms the generated geometry shape of ground and tunnel. Move the generated tunnel shape to the origin to align the bottom of shape in same plane. Move the rectangle which represents the ground together with the tunnel.

- Select all the geometry shapes of the ground and tunnel.
- Set the direction by [2 Points Vector].
- Select the center of the tunnel floor as the first coordinates.
- Enter '0, 0, 0' at the second input window.
- Select < button to calculate the distance between the two coordinates.
- Click [OK].

Tip

To prevent the numerical error when generating tunnel shape at the origin, create tunnel shape at the random location and then transfer to the origin.

* : Geometry > Point & Curve > Tunnel

Create Passageway geometry shape. Through Point & Curve > Tunnel, you can easily create tunnel and locate rockbolt.

- Double click Work Tree > Work Plane > 'YZ (1, 0, 0)'.
- Click [Normal] in the view toolbar.
- Select tunnel type to '3 Center Circle', and section type to 'Full'.
- Input '4', '90', '9', '20' at R1, A1, R2, and A2.
- Check [Include Rock Bolts] option. And enter '10','4' in number, length of rock bolts.
- Input '1.5' at Arrangement > Tangential pitch.
- Check [Make wire] option. Name geometry set name to [Passageway].
- Click [OK].

▶Modeling tunnel section(Passageway)

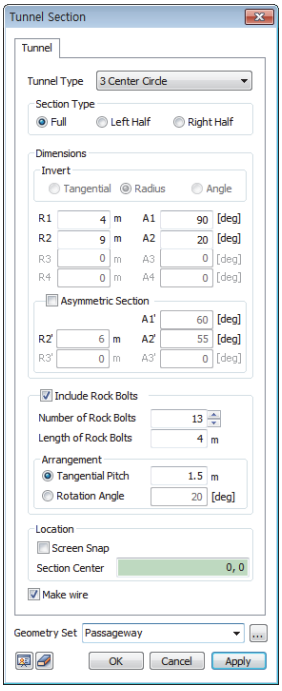

* : Geometry > Transform > Translate

Move the generated passageway tunnel shape to origin to put its floor in the same plane. With the checkbox in the Work Tree > Geometry, you can show only the object shape.

- Select all the passageway geometry shape.
- Select the direction method to [2 Points Vector].
- Select the center of the Passageway floor as the first coordinates.
- Enter '0, 0, 0' at the second input window.
- Select button to calculate the distance between the two coordinates.
- Click [OK].

▶Transfer passageway
▶▶Transferred tunnel section

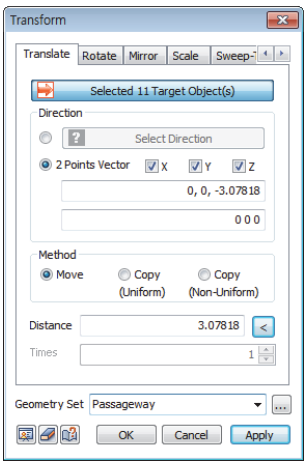

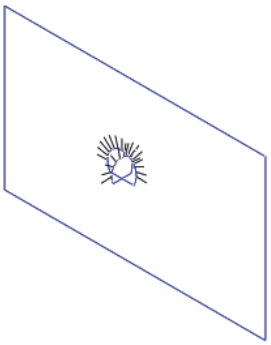

* : Geometry > Protrude > Extrude

This process extrudes generated faces and closed edges (wires) to makes solids.

- Choose the Selection filter to 'Edge'.
- Choose edges (4) consisting ground area.
- Select direction to Y axis (Green).
- Input '46' in the length and check [Make Solid] option.
- Name the geometry set name to 'Ground'.
- Select preview button and see the extruded shape in the work window.
- Click [Apply].
- In the same way, extrude the tunnel section to 45 m of Y axis and make 'Main tunnel' solid.
- In the same way, extrude the tunnel section to 20 m of X axis and make 'Passageway' solid.

Tip

You can select the object shape at the generated geometry set in the Work Tree.

* : Geometry > Surface & Solid > Cylinder

Create cylinder to make vertical shaft. First of all, select all the geometries in the Work Tree. And then select mouse right click > Context menu > Display Mode > Line only. (You can also change it from View toolbar > Display Mode (Geometry).)

- Input '5' in the [Radius], '40' in the [Height].
- Name geometry set name to 'Vertical shaft'.
- Check to see if GCS is selected.
- Select the A point in the image below to input in the [Origin Point].
- Click [OK].

▶Modeling vertical shaft

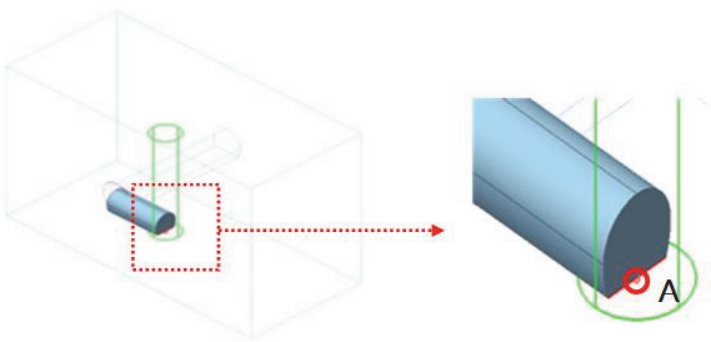

* : Geometry > Boolean > Solid

Process the Boolean operation between solids. Check only the checkbox of solid in Work Tree > Geometry set.

- Select [Embed] tab.
- Select 'Ground' to target object, and select 'Main tunnel' to tool object.
- Check [Delete Tool] option.
- Select Preview to see if the object is embedded properly.
- Click [Apply].
- In the same way, conduct [Embed] by choosing 'Ground' to target object and 'Vertical shaft' to tool object.

▶Embedded solid(Main tunnel/Vertical shaft)

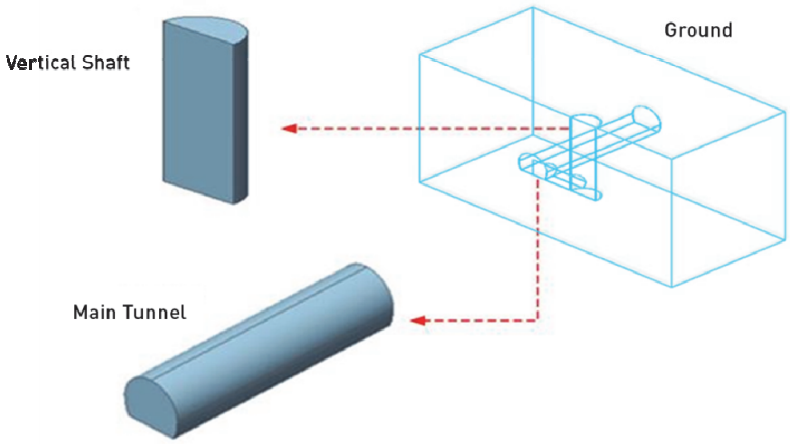

* : Geometry > Divide > Solid

Use divide function to divide passageway solid from ground solid.

- Select ground solid as an object solid.
- Choose [Dividing tools] to 'Tool surface'. Set [Sub Selection Filter] to 'Basic' and [Main Selection Filter] to solid.
- Select 'Passageway' in the Work Tree as the tool surface.
- Check [Divide Touching Faces] option.
- Select object to 'Main tunnel' and 'Vertical shaft' from the Work Tree.
- Press preview button and see if the shape divided properly.stage
- Click [OK].
- Change the name of generated solids by 'F2'key. And then drag & drop the solids to assign each solid into 'Main tunnel', 'Passageway', and 'Ground' geometry set.

▶Divided solid (Main tunnel/Passageway/Vertical shaft)

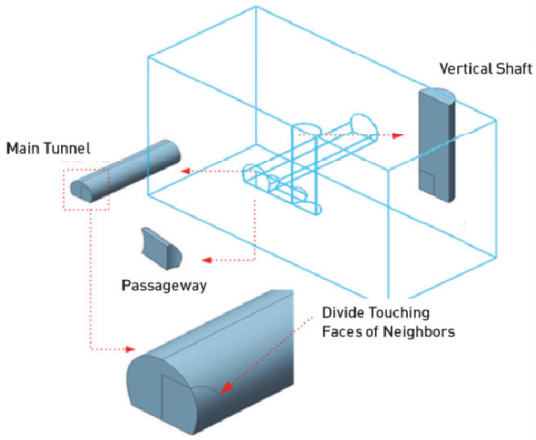

Tip

To primarily filter certain type of object which will be selected, choose the object type from [Selection Filter].
[Selection Filter] consists of object types registered in the software depending on current working status and command type. The user can select specific object types from this composition.

* : Geometry > Point & Curve > Rectangle

Solids need to be divided first before defining construction stages. In the following steps we will create geometries to divide the main tunnel according to construction stages.

- Double click Work Tree > Work Plane > 'XZ (0, -1, 0)'.
- Click [Normal] in the view toolbar.
- Check [Make Face] option.
- Select the geometry set to 'Main tunnel'.
- Make a rectangle which is little bit bigger than main tunnel section.
- Click [OK].

* : Geometry > Transform > Translate

Copy the generated face along the excavation direction. Input excavation interval and repeat times to Move/Copy the excavation surface.

- Select Isometric1 in the View Toolbar.
- Select the face which you generated in the former step.
- Select the direction to Y axis.
- Choose the method to 'Copy (Uniform)', and input '3', '14' in 'Distance' and 'Times'.
- Select geometry set to 'Main tunnel'. Click [OK].

▶Generate surface and move/copy the surface(Main tunnel)

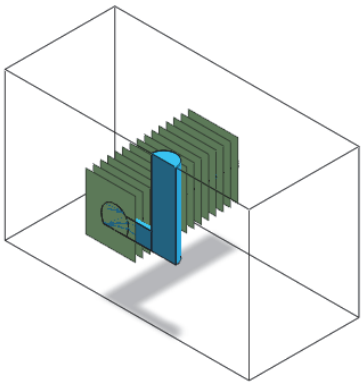

* : Geometry > Divide > Solid

Divide the main tunnel by excavation face. To share nodes, select ground solid connected with main tunnel solid as a touching face.

- Select 'Main tunnel' solid.
- Choose [Selection Filter] to 'Face (A)'.
- Select tool faces (14) which you generated in the former step.
- Check [Dividing Touching Faces] and Select adjacent 'Ground', 'Passageway' solids.
- Select Preview button to see if the shape divided properly.
- Set geometry set to 'Main tunnel'. Click [OK].

▶Divide solid(Main tunnel)

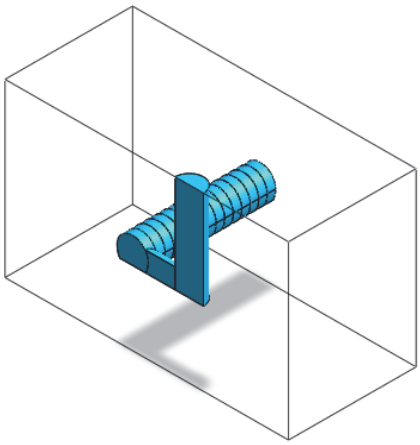

* : Geometry > Point & Curve > Rectangle

Create a rectangle as a dividing tool for passageway

- Double click Work Tree > Work Plane > 'YZ (1, 0, 0)'.
- Click [Normal] in the view toolbar.
- Check [Make Face] option.
- Select the geometry set to 'Passageway'.
- Make a rectangle which is little bit bigger than passageway tunnel section.
- Click [OK].

* : Geometry > Transform > Translate

Move/Copy generated face at the former step along the passageway excavation direction.

- Select Isometric1 in the View Toolbar.
- Select the face which you generated in the former step.
- Select the direction to X axis.
- Choose the method to 'Copy (Non-Uniform)', and input '9, 3' in 'Distance'.
- Select geometry set to 'Passageway'. Click [OK].

▶ Generate surface and move/copy the surface(Passageway)

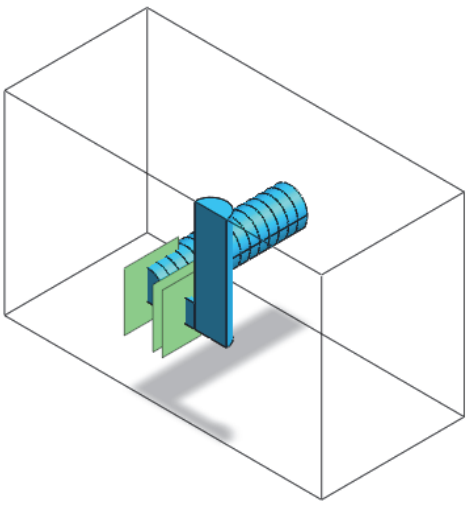

* : Geometry > Divide > Solid

Divide the Passageway by excavation face. To share nodes, select ground solid connected with passageway solid as a touching face.

- Select 'Passageway' solid.
- Choose [Selection Filter] to 'Face (A)'.
- Select tool faces (2) which you generated in the former step.
- Check [Dividing Touching Faces]. And Select adjacent 'Ground' solid.
- Select Preview button to see if the shape divided properly.
- Set geometry set to 'Passageway'. Click [OK].

▶Divide solid(Passageway)

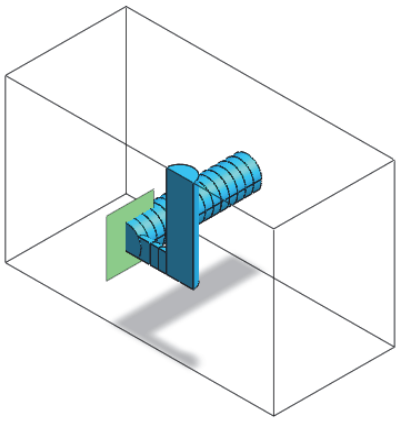

∗ : Geometry > Point & Curve > Rectangle

Create a rectangle as a dividing tool for vertical shaft.

- Double click Work Tree > Work Plane > 'YX (0, 0, 1)'.
- Click [Normal] in the view toolbar.
- Check [Make Face] option.
- Select the geometry set to 'Vertical shaft.
- Make a rectangle which is little bit bigger than vertical shaft tunnel section.
- Click [OK].

∗ : Geometry > Transform > Translate

Move/Copy generated face at the former step to the vertical shaft excavation direction.

- Select Isometric1 in the View Toolbar.
- Select the face which you generated in the former step.
- Select the direction to Z axis.
- Choose the method to 'Copy (Non-Uniform)', and input '6, 7, 6, 6, 5' in 'Distance'.
- Select geometry set to 'Vertical Shaft'. Select [OK].

▶Generate surface and move/copy the surface(Vertical shaft)

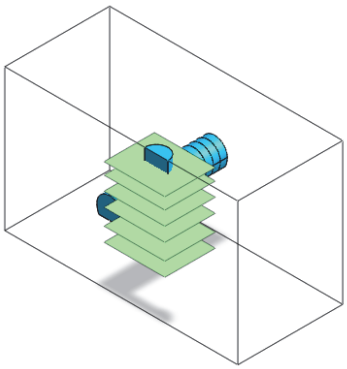

* : Geometry > Divide > Solid

Divide the Vertical shaft by excavation faces. To share nodes, select ground solid connected with vertical shaft solid as a touching face.

- Select 'Vertical shaft' solid.
- Choose [Selection Filter] to 'Face (A)'.
- Select tool faces (5) which you generated in the former step.
- Check [Dividing Touching Faces]. And select adjacent 'Ground' solid and 'Passageway' which is in direct contact with vertical shaft.
- Select Preview button to see if the shape divided properly.
- Set geometry set to 'Vertical shaft'. Click [OK].

▶Divide solid(Vertical shaft)

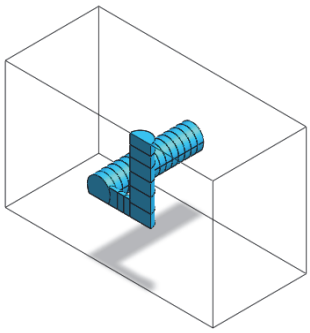

* : Geometry > Point & Curve > Rectangle

Create a rectangle to create Strata.

- Click [Normal] in the view toolbar.
- Check [Make Face] option.
- Choose geometry set to 'Ground'.
- Make a rectangle which is little bit bigger than ground area.
- Click [OK].

* : Geometry > Transform > Translate

Move/Copy generated face at the former step to the Strata location.

- Select Isometric1 in the View Toolbar.
- Select the face which you generated in the former step.
- Select the direction to Z axis.
- Choose the method to 'Copy (Non-Uniform)', and input '19, 11' in 'Distance'.
- Select geometry set to 'Ground'. Click [OK].

▶Generate surface and move/copy the surface(Ground)

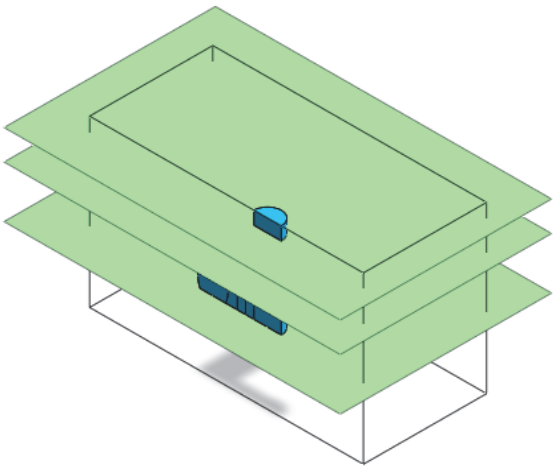

* : Geometry > Divide > Solid

Divide the ground with strata surfaces.

- Select 'Ground' solid.
- Choose [Selection Filter] to 'Face (A)'.
- Select faces (2) generated in the former step as tool face.
- Select Preview button to see if the shape divided properly.
- Set geometry set to 'Ground'. Select [OK].

▶Divide solid(Ground)

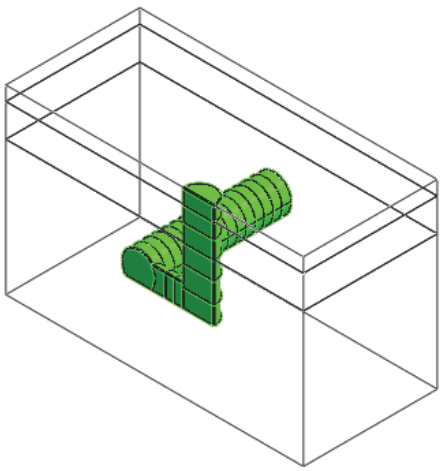

* : Geometry > Point & Curve > Line

Create rockbolts of the vertical shaft. Draw a rockbolt line.

- Double click Work Tree > Work Plane > 'XY (0, 0,1).
- Input the start point '25, 0'. And select 'Vertical shaft' geometry set.
- Select [Apply]. And put end location to '4, 0'.
- Click [OK].

* : Geometry > Transform > Rotate

Create several rockbolts by rotating the line generated in the former step about Z axis.

- Select the line generated in the former step.
- Select the Rotation axis to Z axis.
- Check [Location] option and input '20, 0, 0'.
- Select the [Method] to 'Copy (Non-Uniform)'. And put '15, 5@30' in the [Angle].
- Choose 'Vertical shaft' geometry set, and press [OK].
- Press [Delete] key to delete the line generated in the former stage.

▶Generated rockbolt(Vertical shaft)

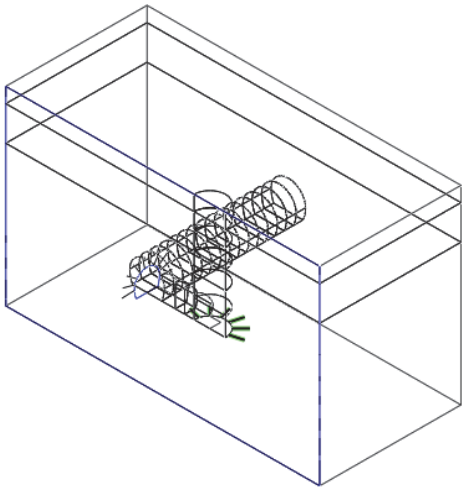

4.2 Generate Meshes

* : Mesh > Control > Size Ctrl

The mesh sizes should be controlled to get meshes of higher quality and less number. In this process smaller meshes are set for tunnel and larger meshes are set for outskirt of the model.

- Select [Front] in the View toolbar.
- Refer to the image below; select the edges by dragging A, B, C area.
- Choose the methods to 'Interval Length' and input '8' in the mesh size.
- Press [Preview] button to see if the size control is assigned properly.
- Click [Apply].

▶Edge seed(A~C)

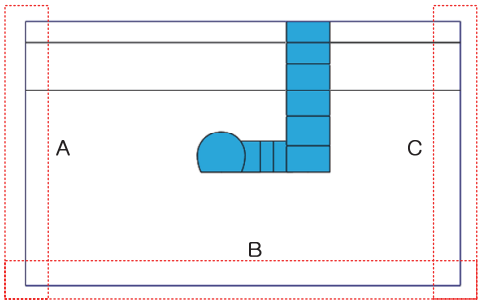

- Selected Isometric1 in the View Toolbar.
- Choose [Polyline] in the Selection Toolbar.
- Select edges (5) by drawing polyline D in the image below.
- Choose the method to 'Linear Grading (Length)', and input 'Start Length', 'End Length' to '8', '2'.
- Select Preview button to see if the size assigned properly.
- Select [Apply].
- Select edges (5) by drawing polyline E in the image below.
- Choose the method to 'Linear Grading (Length)', and input 'Start Length', 'End Length' to '2', '6'.
- Click [Apply].
- Select edges (3) by drawing polyline F in the image below.
- Choose the method to 'Linear Grading (Length)', and input 'Start Length', 'End Length' to '8', '4'.
- Check [Symmetric Seeding] option. Click [Apply].
- Select edges (2) by drawing polyline G in the image below.
- Choose the methods to 'Interval Length' and input '8' in the mesh size.
- Click [OK].

▶Edge seed(D~G)

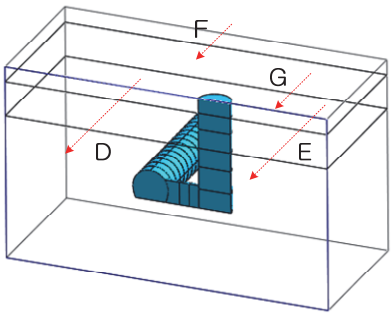

Tip

As the mesh size gets smaller, the result comes out closer to the true answer. But small mesh size will also lead to longer analysis time. So only generate small and dense meshes around the part (around tunnel) where we want to see the results.

* : Mesh > Generate > 3D

Create mesh sets.

- Select [Front] in the view Toolbar.
- Choose [Rectangle] in the Selection Toolbar.
- At the [Auto-Solid] tab, select Solids (15) by dragging through A area referring to the image below.
- Set size to '2', and choose '1: Soft rock' property.
- Select 'Hybrid Mesher'.
- Name mesh set name to 'Main tunnel', and Press [Apply].
- Select Solids (3) by dragging through B area referring to the image below.
- Set size to '2', and choose '1: Soft rock' property.
- Name mesh set name to 'Passageway', and Press [Apply].
- Select Solids (6) by dragging through C area referring to the image below.
- Set size to '2', and choose '1: Soft rock' property.
- Name mesh set name to 'Vertical shaft', and Press [Apply].
- Select ground solid (3).
- Set size to '5', and choose '1: Soft rock' property.
- Name mesh set name to 'Ground', and Press [OK].

▶Generate mesh (Area A~C)

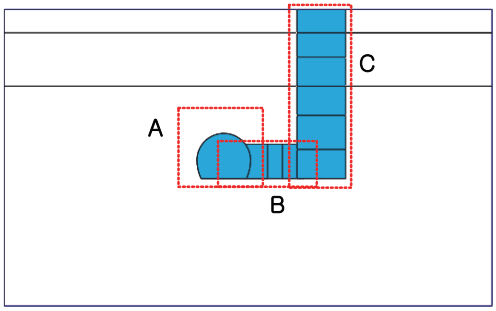

* : Mesh > Element > Extract

- Hide all the meshes and geometries except for solids of Main tunnel, Passageway, Vertical shaft in the Work Tree.
- Select [Front] in the view Toolbar.
- In the Mesh > Element > Extract, select type to 'Face'.
- Check [Skip Duplicated Faces] and [Register Based-on Owner Shape] option.
- Select the property to '5:Main_connection S/C'.
- Click [OK].

▶Extract sub element

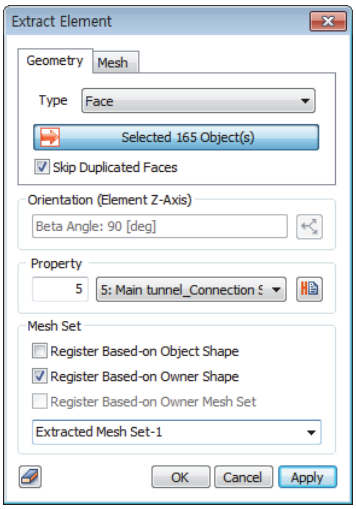

* : Mesh > Element > Delete

Select Delete Element function to delete unnecessary element.

- Uncheck to hide Main tunnel, Passageway, Vertical solids in the Work Tree > Geometry.
- Select [Right] in the View Toolbar.
- Refer to image below, drag & select elements of area A, B, C, D.
- Click [OK].

▶Delete mesh
▶Generated mesh(Plate)

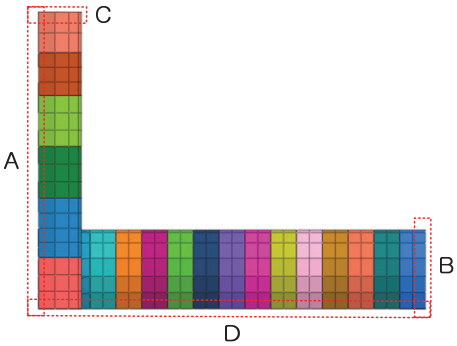

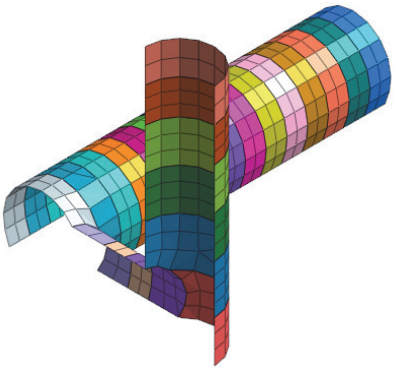

* : Mesh > Generate > 1D

Create a 1D rockbolt mesh for main tunnel.

- Click Isometric1 in the View Toolbar.
- Select rockbolt edges (13) of the tunnel registered in Work Tree > geometry > Main tunnel > Line.
- Set [Size Method] to 'Size' and input '2'.
- Check if [Attribute ID] set as '7' .
- Select Preview button to see the location of generated nodes.
- Click [OK].

* : Mesh > Transform > Trans.

Move/Copy the generated rockbolt meshes along the direction of excavation.

- Select 'Auto-Mesh (1D)' generated in the former step.
- Select direction to y axis.
- Choose method to 'Copy (Non-Uniform), and input distance to '1.5, 14@3'.
- Select >> button. Check [Merge Nodes] and [Register Each Mesh Independently].
- Name mesh set name to 'Main tunnel R/B'. Press [OK].
- Delete 'Auto-Mesh (1D)' which was used to move/copy rockbolt.

▶Generated mesh(Main tunnel rockbolt)

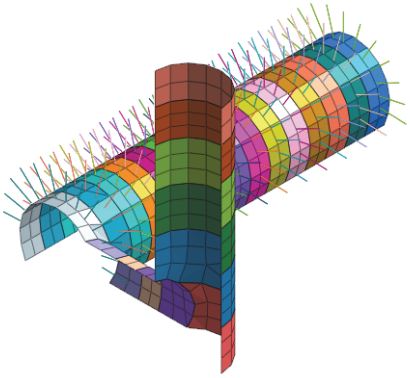

* : Mesh > Generate > 1D

Create rockbolt meshes for passageway.

- Click [Right] in the View Toolbar.
- Activate rockbolt edges of the tunnel registered in Work Tree > geometry > Passageway > Line.
- Delete unnecessary edges (5) referring to the image below.
- Select rockbolt edges (5) of the tunnel registered in Work Tree > geometry > Passageway > Line.
- Set [Size Method] to 'Size' and input '2'.
- Check if [Attribute ID] set as '7'.
- Select [Preview] button to see the locations of generated nodes.
- Click [OK].

▶Delete mesh(Passageway rockbolt)

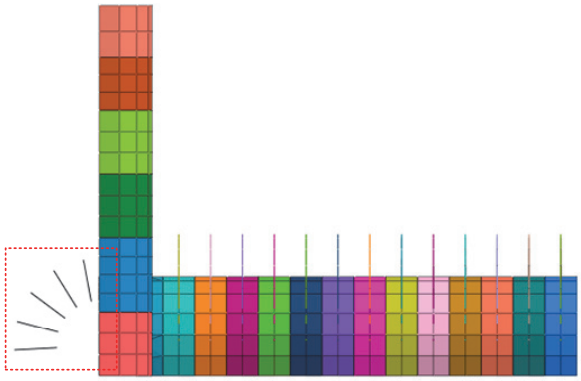

* : Mesh > Transform > Trans.

Move/Copy the generated rockbolt meshes along the direction of excavation.

- Select 'Auto-Mesh (1D)' generated in the former step.
- Select direction to x axis.
- Choose method to 'Copy (Non-Uniform), and input distance to '7, 2@3.5'.
- Select >> button. Check [Merge Nodes] and [Register Each Mesh Independently].
- Name mesh set name to 'Passageway R/B'. Press [OK].
- Delete 'Auto-Mesh(1D)' which was used to move/copy rockbolt.

▶Generate mesh(Passageway rockbolt)

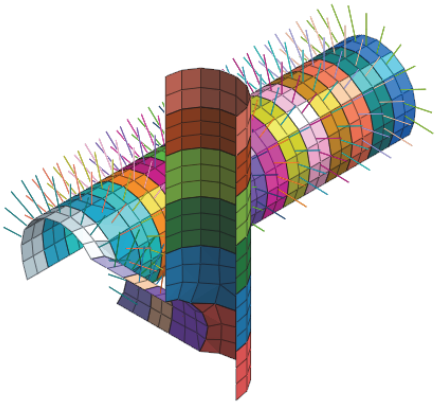

* : Mesh > Generate > 1D

Create rockbolt mesh of Vertical shaft.

- Select rockbolt edges (6) of the tunnel registered in Work Tree > geometry > Vertical shaft > Line.
- Set [Size Method] to 'Size' and input '2'.
- Check if [Attribute ID] set as '7'.
- Select [Preview] button to see the locations of generated nodes.
- Click [OK].

* : Mesh > Transform > Trans.

Move/Copy the generated rockbolt mesh in the direction of passageway excavation.

- Select 'Auto-Mesh(1D)' generated in the former step.
- Select direction to z axis.
- Choose method to 'Copy (Non-Uniform), and input distance to '3.5, 6, 6.5, 6, 5.5, 4.8'.
- Select >> button. Check [Merge Nodes] and [Register Each Mesh Independently].
- Name mesh set name to 'Vertical shaft R/B'. Press [OK].
- Delete 'Auto-Mesh(1D)'which was used to move/copy rockbolt by pressing [Delete] key.

▶Generate mesh(Vertical rockbolt)

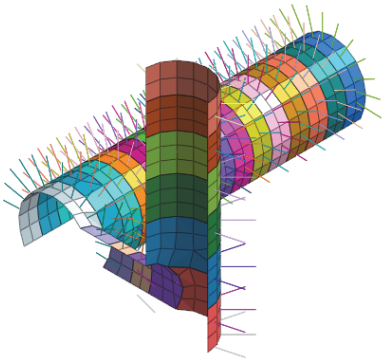

* : Mesh > Element > Delete

Delete unnecessary rockbolt meshes.

- Click [Front] in the View Toolbar.
- See if the [Selection Filter] set as '1D'.
- Choose unnecessary rockbolt elements (10) at the inner of passageway.
- Click [OK].

▶Delete element

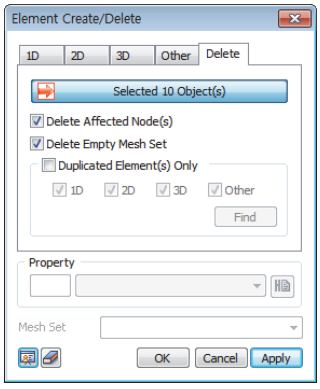

* : Mesh > Mesh Set > Rename

Modify names for mesh sets.
GTS NX provides [Stage Definition Wizard] to easily define construction stages. But to use the Wizard, mesh sets' names must have regularity. This step we will change names for mesh sets. First, change names of tunnel mesh sets.

- Select the entire 'Main tunnel' in the Work Tree > Mesh.
- Set 'Global Rectangular' for coordinate in [Sorting Order]. And select 1st to 'Y'.
- Set the [Order] to 'Ascending' and enter Name to 'Main tunnel#'. Input '1' in the [Starting suffix Number].
- Click [Apply].
- Select the entire 'Passageway' in the Work Tree > Mesh.
- Set 'Global Rectangular' for coordinate in [Sorting Order]. And select 1st to 'X'.
- Set the [Order] to 'Descending' and enter Name to 'Passageway#'. Input '1' in the [Starting suffix Number].
- Click [Apply].
- Select the entire 'Vertical shaft' in the Work Tree > Mesh.
- Set 'Global Rectangular' for coordinate in [Sorting Order]. And select 1st to 'Z'.
- Set the [Order] to 'Descending' and enter Name to 'Vertical shaft#'. Input '1' in the [Starting suffix Number].
- Click [Apply].

▶Align mesh set name (3D Element)

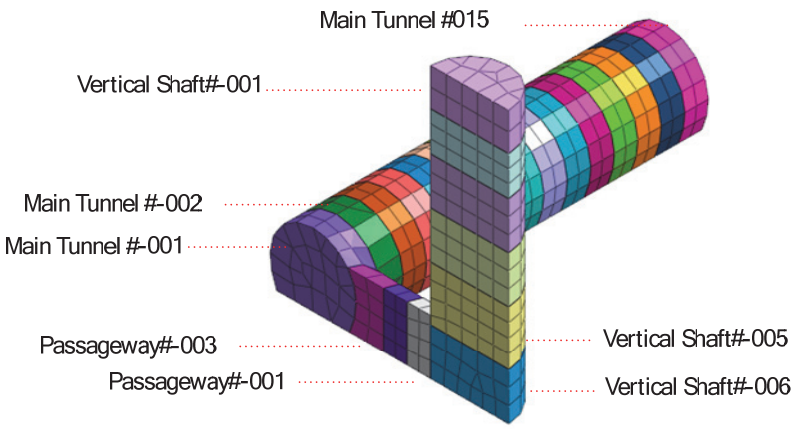

- In the same way rename Shotcrete and Rockbolt. Rename the ground mesh with [F2] key to 'Soft rock', 'Weathered rock', 'Weathering soil'.

* : Mesh > Element > Parameters

Change the mesh property.
We didn't consider property for the each mesh set when generating, use [Parameter] to assign proper property.

- Choose 'Change property' in [3D] tab.
- In Work Tree > Mesh, Select mouse right click > Sort > By Name.
- In Work Tree > Mesh, Select 'Vertical shaft#-002', 'Vertical shaft#-003', 'Weathered rock'.
- Select property to '2: Weathered rock'. Click [Apply].
- In Work Tree > Mesh, Select 'Vertical shaft#-001', 'Weathering soil'.
- Select property to '3:Weathering soil'. Click [Apply].
- Change to [2D] tab.
- In Work Tree > Mesh, Select 'Vertical shaft S/C#-003', 'Vertical shaft S/C#-004', 'Vertical shaft S/C #-005', 'Vertical shaft S/C #-006'.
- Select property to '6: Vertical shaft S/C'. Click [Apply].
- In Work Tree > Mesh, Select 'Vertical shaft S/C #-001', 'Vertical shaft S/C #-002'.
- Select property to '4: Conc Panel'. Click [OK].

Tip

Through View Toolbar > Display mode(Mesh)( ) > 'Property color' or 'Material color', you can easily check out assigned property.

Section 5
Analysis Setting

5.1 Setting Loading Conditions

∗ : Static/Slope Analysis > Load > Self Weight

Gravity is calculated automatically by multiplying the inputted unit weight of the ground, the structure geometry and the acceleration of gravity. It can be easily set by inputting a scale factor of direction. The default value of the gravity direction is set.

- Set the [Name] to 'Gravity-1' and enter 'Self weight' as the [Load set] name.
- Put -1 in Gz this defines the gravity acceleration's direction.
- Click [OK].

5.2 Setting Boundary Conditions

∗ : Static/Slope Analysis > Boundary > Constraint

This process sets boundary conditions against internal deformation or rotation based on GCS.
Automatically set displacement constraints at the left/right/bottom parts of the model according to GCS.

- In the [Auto] tab, set name and boundary set name to 'Constraint-1', 'Constraint'.

Tip

In 3D model analysis, displacement constraints are applied in x direction for left/right, y direction for front/back, xyz direction for the bottom part. GTS NX automatically recognizes and sets the boundary conditions for the model.

5.3 Define Construction Stages

∗ : Static/Slope Analysis > Construction Stage > Stage Set

First create a construction stage set. There are Stress, Seepage, Stress-Seepage-Slope, Consolidation, and Fully Coupled Stress Seepage for the stage type. For this model, set the stage type to 'Stress'.

- Enter name to '3D Tunnel Connection'. Set stage type to 'Stress'.
- Select [Add] to create construction stage. Click [Close].

▶Construction stage set

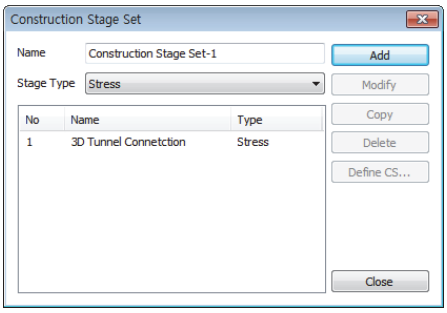

Tip

In GTS NX, it is possible to create several construction stage sets to perform different analysis.

* : Static/Slope Analysis > Construction Stage > Stage Wizard

It is easy to define Construction stages in GTS NX if the add/delete elements are repeated in a regular way. To define construction stages using 'Stage definition wizard', regular numbering (postfix) for each mesh set has to be assigned in advance. Refer to section 4 to learn how to rename mesh sets using regular numbers.

- Check if [Construction Stage Set] is set to '3D Tunnel Connection'.
- In [Set Assignment Rules], choose the first set type to 'Mesh set'.
- Click [Set Name Prefix] and select 'Vertical shaft#-'.
- Select 'R' in [A/R], which signifies 'reduce'
- Input '1','1' in [Start Stage] and [Stage Inc].
- In [Set Assignment Rules], choose the second set type to 'Mesh set'.
- Click [Set Name Prefix] and select 'Vertical shaft S/C#-'.
- Select 'A' in [A/R], which signifies 'add'
- Input '2','1' in [Start Stage] and [Stage Inc].
- In [Set Assignment Rules], choose the third set type to 'Mesh set'.
- Click [Set Name Prefix] and select 'Vertical shaft R/B#-'.
- Select 'A' in [A/R].
- Input '2','1' in [Start Stage] and [Stage Inc].
- Assign the rest as following table.
- Click [Apply Assignment Rules].

▶Table. Stage definition wizard

Set Name	A/R	End Postfix	Start Stage	Stage Inc.
Vertical shaft#-	R	1	1	1
Vertical shaft S/C#-	A	1	2	1
Vertical shaft R/B#-	A	1	2	1
Passageway#-	R	1	8	1
Passageway S/C#-	A	1	9	1
Passageway R/B#-	A	1	9	1
Main tunnel#-	R	1	12	1
Main tunnel S/C#-	A	1	13	1
Main tunnel R/B#-	A	1	13	1

▶Set assignment rules

Set Assignment Rules

Set Type	Set Name Prefix	A/R	Start Postfix	F	End Postfix	Postfix Inc.	Start Stage	Stage Inc.
Mesh set	Vertical shaft#-	R	1	☐		1	1	1
Mesh set	Vertical shaft S/C#-	A	1	☐		1	2	1
Mesh set	Vertical shaft R/B#-	A	1	☐		1	2	1
Mesh set	Passageway#-	R	1	☐		1	8	1
Mesh set	Passageway S/C#-	A	1	☐		1	9	1
Mesh set	Passageway R/B#-	A	1	☐		1	9	1
Mesh set	Main tunnel#-	R	1	☐		1	12	1

▶ Apply Assignment Rules

Element, Boundary, Load Activation Status

Set Type	Set Name Prefix	I.S.	S1	S2	S3	S4	S5	S6	S7	S8	S9	S10	S11	S12	S13	S1
Boundary Set	Constraint															
Mesh set	Default Mesh Set															
Mesh set	Main tunnel R/B#-														A: 1	A: 2
Mesh set	Main tunnel S/C#-														A: 1	A: 2
Mesh set	Main tunnel#-													R: 1	R: 2	R: 3
Mesh set	Passageway R/B#-										A: 1	A: 2	A: 3			
Mesh set	Passageway S/C#-										A: 1	A: 2	A: 3			
Mesh set	Passageway#-									R: 1	R: 2	R: 3				
Load Set	Self weight															
Mesh set	Soft rock															
Mesh set	Vertical shaft R/B#-			A: 1	A: 2	A: 3	A: 4	A: 5	A: 6							
Mesh set	Vertical shaft S/C#-			A: 1	A: 2	A: 3	A: 4	A: 5	A: 6							
Mesh set	Vertical shaft#-		R: 1	R: 2	R: 3	R: 4	R: 5	R: 6								
Mesh set	Weathered rock															
Mesh set	Weathering soil															

- Select Main tunnel#-, Passageway#-, Vertical shaft#-, Soft rock, weathered rock, weathering soil.
- Drag selected item to [I.S.] of [Element, Boundary, and Load Activation Status].
- Drag boundary condition, load to [I.S.] as following image.

▶Define construction stage(Initial step)

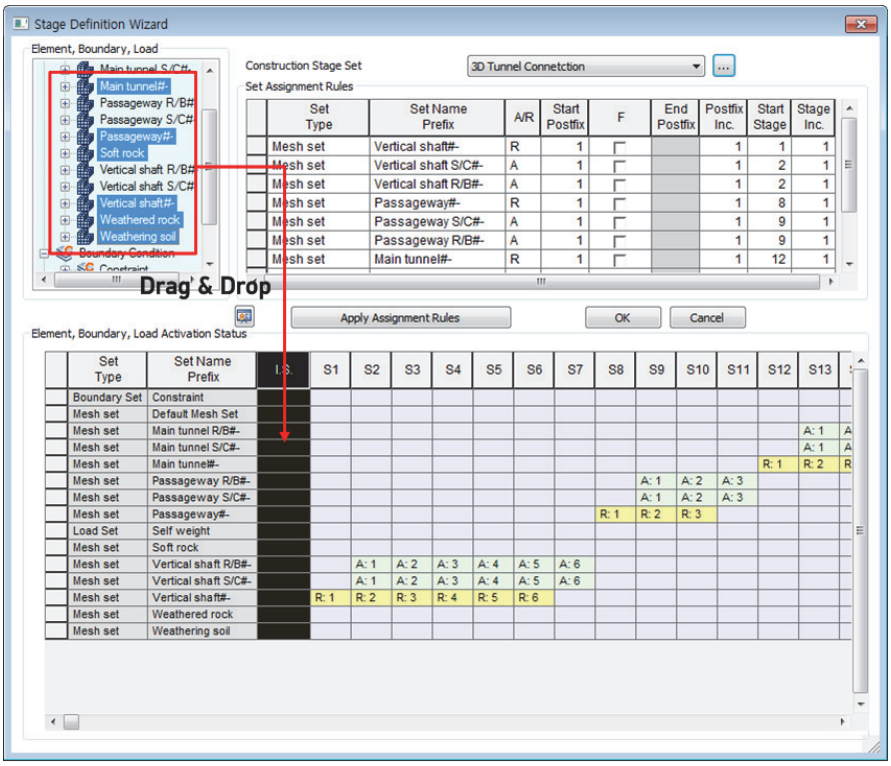

∗ : Static/Slope Analysis > Construction Stage > Stage Set

Stages which are generated by the Stage definition wizard need to be verified to ensure the good assignment of all the conditions.
In the [Define Construction Stage] menu, you can get more detailed options (LDF etc.) than thus available in the [Stage Definition Wizard]. However in case of complicated model, it is more convenient to use the [Stage Definition Wizard] to generate the framework of entire construction stages first. And then use [Define construction stage] menu to change additional options for specific construction stages.

- Select '1:I.S.' at [Stage ID].
- Check [Clear Displacement] option.
- Click [Save], and click [Close].

5.4 Setting Analysis Case

* : Analysis > Analysis Case > General

This process sets analysis method and model data for the analysis. The analysis and output types could be controlled using advanced options. For construction stage analysis, because the data for the analysis has been formerly set, the [Analysis Case Model] is deactivated.

- Set name to '3D Tunnel Connection'.
- Select [Solution Type] to 'Construction Stage', and [Construction Stage Set] to '3D Tunnel Connection'.
- Analysis Control > General tab, Check [Initial Stage for Stress Analysis] and select '1:I.S.

▶Analysis control

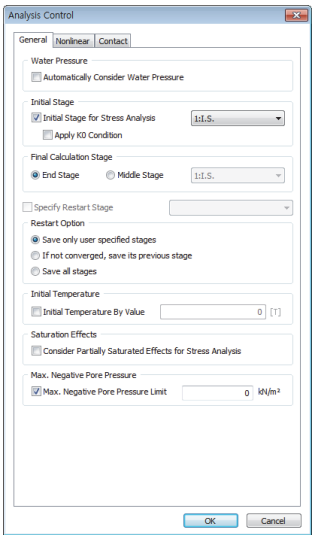

5.5 Perform Analysis

* : Analysis > Analysis > Perform

Perform analysis. After the analysis is done, the software automatically switches to [Post-Mode](checking results). To modify model and option after the analysis, you should switch back to the [Pre-Mode].

- Selected the analysis cases that you want to perform and click [OK].

Tip

During the analysis, you can check the calculation process in real-time. Messages such as whether the results converge or not, warnings and errors can be checked through [Output Window].
The model is automatically saved before being analyzed. The information about analysis is saved in *.OUT file in the same place where the model file is saved.
When analyzing a model, the results can be controlled by Analysis > Analysis Case > General > Output Control option. And if you set the output option as [Binary and Text], the results of nodes and elements after the analysis are also plotted in *.OUT file.

Section 6
Results

You can verify displacement, stress, member force etc. in the Result Tree after the analysis. All the results can be plotted as contour, table, and graph. In this tutorial, the main result items which need to be checked are listed below.

- Tunnel displacement – Crown displacement, Tunnel convergence
- Verify ground maximum principal stress.(Contour, Vector)
- Verify shotcrete stress and rockbolt axial force
- Check with Cutting Plane

6.1 Verify Displacement

Verify by 'Displacement' of the work tree. TX, TY, TZ signify displacements in directions of X, Y, Z. Since gravity direction of this model is Z d, tunnel crown displacement is shown in TZ TRANSLATION, and tunnel internal displacement can be verified in TX TRANSLATION, TY TRANSLATION.
'(V)' refers to the result item which can represent both in contour and vector formats at the same time. In GTS NX, it is possible to show contour/vector simultaneously for displacement and stress results.

- Select the last stage (S27) to check the result in the Work Tree > Results > 3D Tunnel Connection Analysis, select Displacement > TZ TRANSLATION (V).

- Select [Front] in View Toolbar. And verify the results in the front view.

▶Crown displacement (Isometric1)
▶▶Crown displacement (Front view)

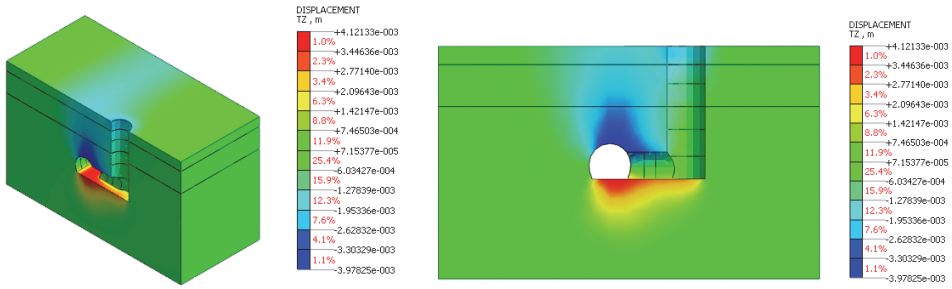

- Click Result > Advance > Probe to see the value of selected node. Also by this function you can find the locations of maximum, minimum results.

▶Probe

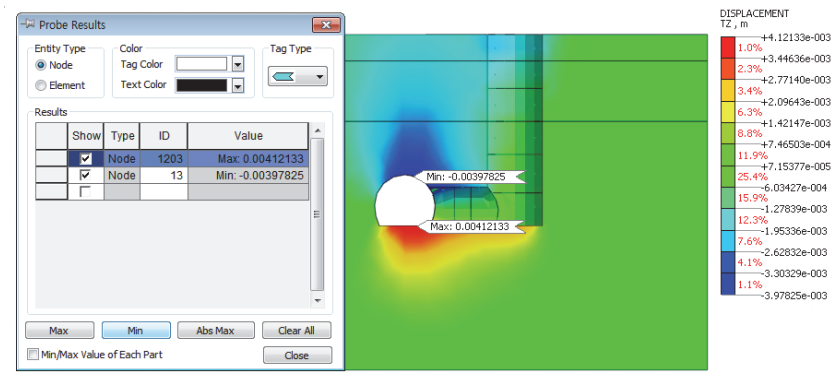

- Simulation bar at the bottom of the work window helps you to view the evolution of results in each construction stage.

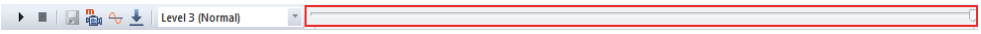

- Select the stage (S27) in the Work Tree > Results > 3D Tunnel Connection Analysis, and select Displacement > TX TRANSLATION (V), TX TRANSLATION to see the displacement results in X, Y directions.

▶X direction displacement

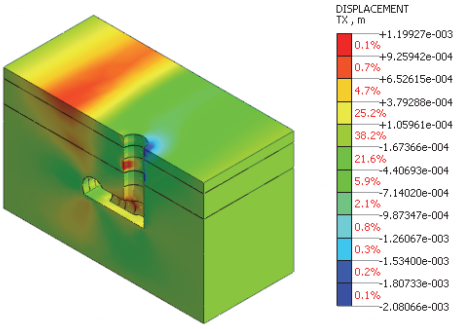

▶▶Y direction displacement

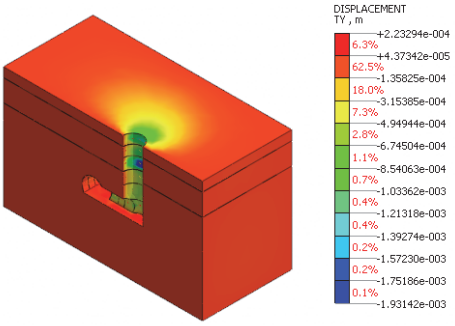

6.2 Verify Stress

The Segment stress can be verified by 'Solid Stresses' in the Results Tree. S-XX, S-YY, S-ZZ represent the stresses in each direction. You can see the maximum principal stresses in 'S-PRINCIPAL A (V)', and minimum principal stress in 'S-PRINCIPAL C (V)'.

- Select the stage(S27) in the Work Tree > Results > 3D Tunnel Connection Analysis, and select the Solid Stresses > S-PRINCIPAL A(V), S-PRINCIPAL C(V) to verify the maximum principal stresses and minimum principal stresses.

▶Maximum principal stress
▶▶Minimum principal stress

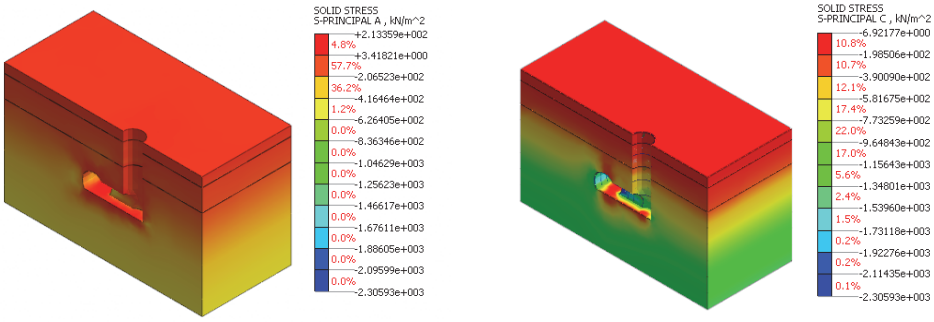

- Deselect Result > General > Contour, select vector. In the property window at the left bottom of the work window, check [Only Free Face] option of vector. Select [Apply].

▶Property window(Vector)
▶▶Minimum principal stress(Vector)

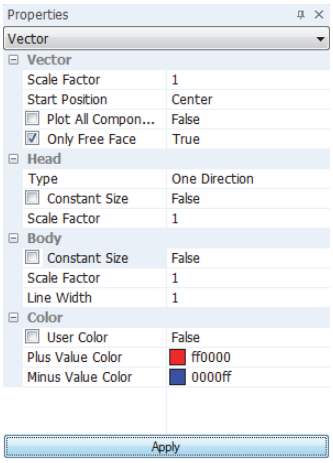

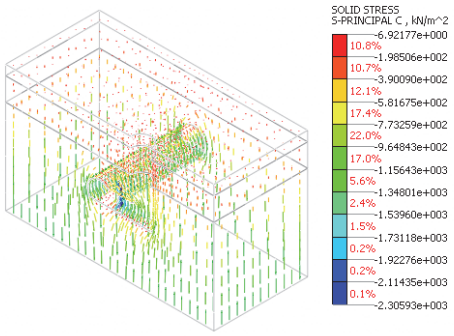

6.3 Verify Shotcrete Stress and Rockbolt Axis Force

Verify stresses of Shotcrete and axis force of Rockbolt. Since shotcrete is shell element, results about X, Y, Z axis of element axis are plotted. Shell is a plate element which has a thickness, so results plotted in TOP, MID, and BOTTOM part of the plate.

- Select a stage (S27) to check the result in the Work Tree > Results > 3D Tunnel Connection Analysis, select Shell Element Stresses > S-XX TOP.

- Select 'Exclude' in Result > General > No Results.

▶X direction stress of Shotcrete
▶▶Exclude no result entity

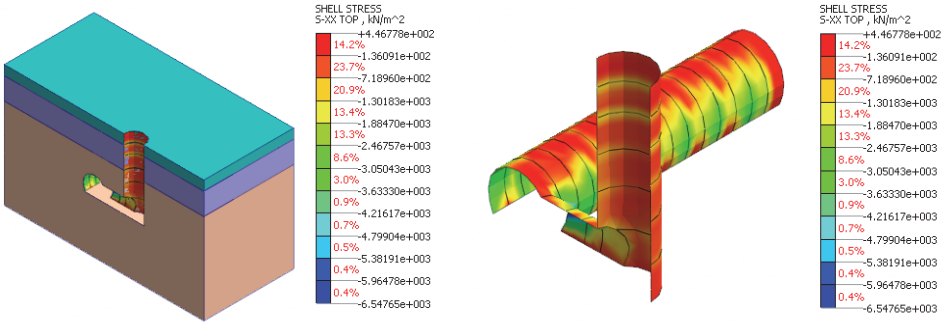

- Select a stage (S27) to check the result in the Work Tree > Results > 3D Tunnel Connection Analysis, select Truss Element Forces > AXIAL FORCE.

- Select 'Feature Edge' in Result > General > No Results.

▶Rockbolt axial force
▶▶Show feature edge

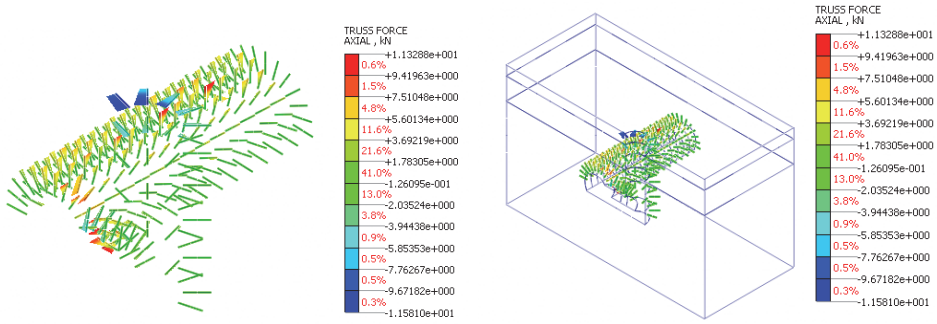

6.4 Verify Cutting Plane

In case of 3D model, you can slice the model with specific plane and check the results at the cutting plane. In GTS NX, by slicing the model with cutting planes you can easily check the results of the specific points located at inner part of the model.

- Change back to default setting by Result > Etc. > Initialize.
- Select a stage (S27) to check the result in the Work Tree > Results > 3D Tunnel Connection Analysis, select Displacement > TOTAL TRANSLATION(V).
- Select [Clipping Plane] in Advanced View Toolbar. In [Define Plane] window, select plane direction to 'X' and direction to '0m'. Click [Add] button to create 'plane1'.
- Set Plane direction to 'Y', select [Reverse]. Click [Add] to create 'plane2'.
- Choose [Plane Composite] to 'Union'.

▶Clip & Slice Plane
▶▶Define Plane

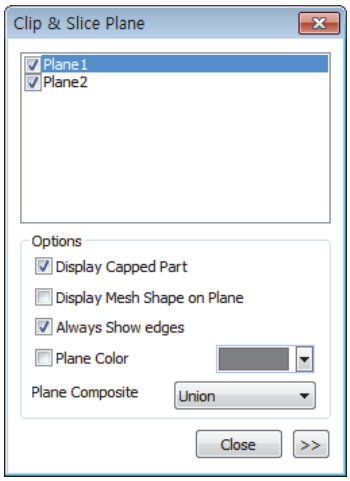

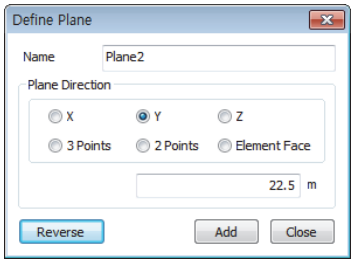

▶Sliced by plane1
▶▶Sliced by plane1&2

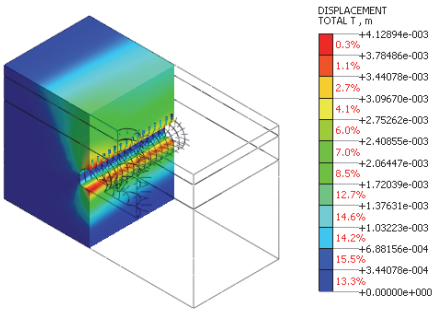

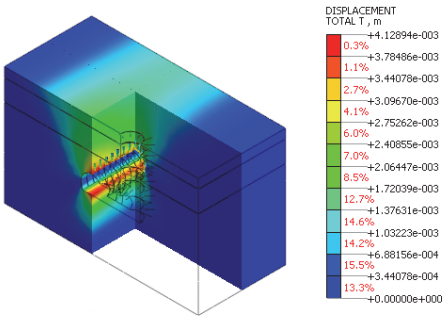

- Select [3D->2D] in Result > Advanced > Others. [3D->2D] wizard is for verifying results by tagging the result when 3D model is sliced by specific plane. Check [Show Points] to see the points in the slice plane.

▶ Probe
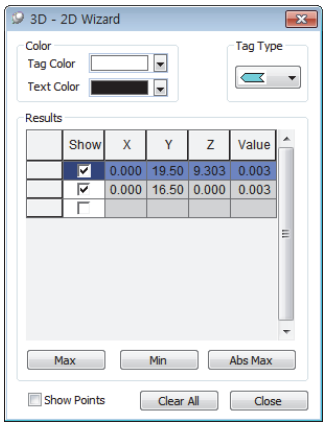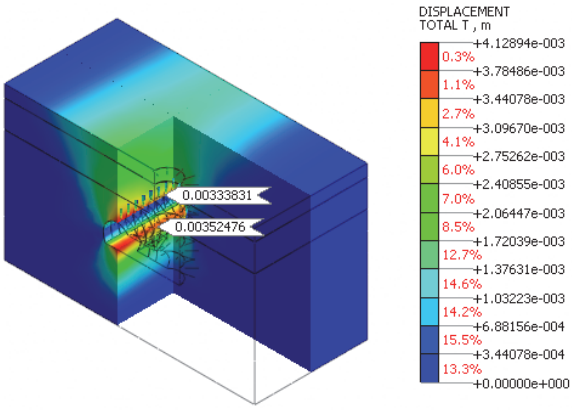
▶▶ Probe at slice plane