Chapter 4
3D Shield TBM

Workflow

	: Geometry > Point & Curve > Rectangle	6
	: Geometry > Point & Curve > Circle	6
	: Geometry > Protrude > Extrude	6
	: Geometry > Surface & Solid > Auto Connect	7
	: Geometry > Point & Curve > Rectangle	8
	: Geometry > Transform > Translate	8
	: Geometry > Divide > Solid	9
	: Mesh > Control > Size Ctrl.	10
	: Mesh > Generate > 3D	10
	: Mesh > Element > Extract	11
	: Mesh > Element > Delete	11
	: Mesh > Mesh Set > Rename	12
	: Static/Slope Analysis > Load > Self Weight	13
	: Static/Slope Analysis > Load > Definition Set	13
	: Static/Slope Analysis > Load > Pressure	13
	: Static/Slope Analysis > Boundary > Constraint	15
	: Static/Slope Analysis > Boundary > Change Property	15
	: Static/Slope Analysis > Construction Stage > Stage Set	19

Chapter 4
3D Shield TBM

	: Static/Slope Analysis > Construction Stage > Stage Wizard	19
	: Static/Slope Analysis > Construction Stage > Stage Set	21
	: Analysis > Analysis Case > General	21
	: Analysis > Analysis > Perform	22

3D Shield TBM Analysis

Section 1
Overview

1.1 Learning Purpose

Tunnel Method is divided into blasting excavation method and mechanical Tunnel method (TBM).
Open cut method and NATM method have problems such as traffic hindrance according to the congestion of cities, noise and vibration pollution, in-depth construction location according to city facility reorganization, and lack of place for huge basement structures. This is why Shield TBM method is more and more used.
Especially, in case of shallow city tunnel, the behavior of surrounding tunnel will lead to a ground settlement, and this will affect to surrounding structure and obstruction. So you have to evaluate this influence when you design.

▶Shield TBM schematic diagram

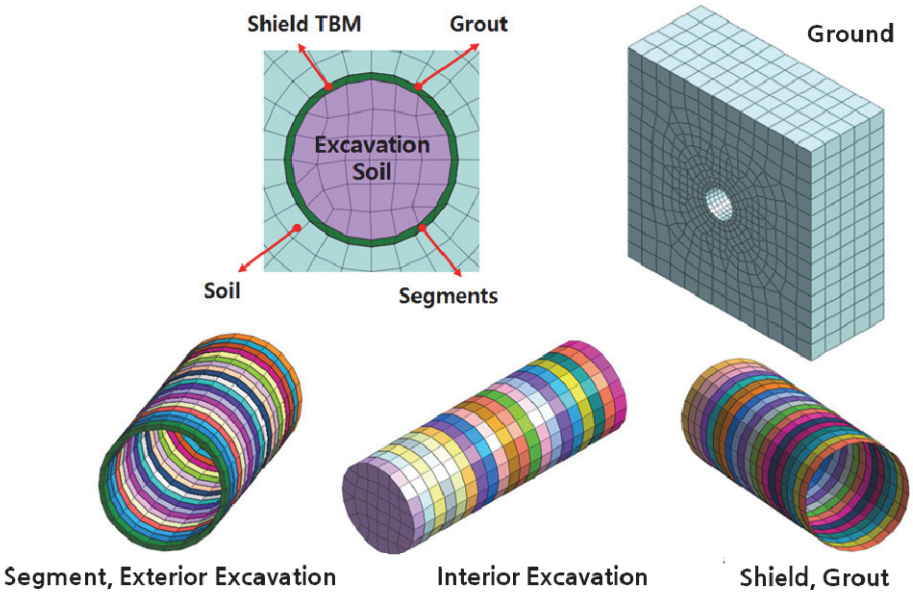

In this tutorial, the following main concepts will be explained:

- Shield TBM tunnel modeling
- Enter loads
- Setting construction stage
- Analyze Results – Generation of displacement in each construction stage.

1.2 Model and Analysis Summary

This model is a simple example of modeling shield TBM in the underground.
It uses 'Plate' elements to model the shield TBM and the concrete grouting, and uses 'Solid' elements to model Segments. During the Shield TBM excavation, it is assumed that the excavation pressure (HP) and the Jack thrust (J) are applied on the shield excavation face. The Shield external pressure(S) and segment external pressure (E) are applied around that face.
Since the data of this tutorial is simplified for the purpose of analysis process acquirement, it might be different with a real project application.

▶Cross-section diagram

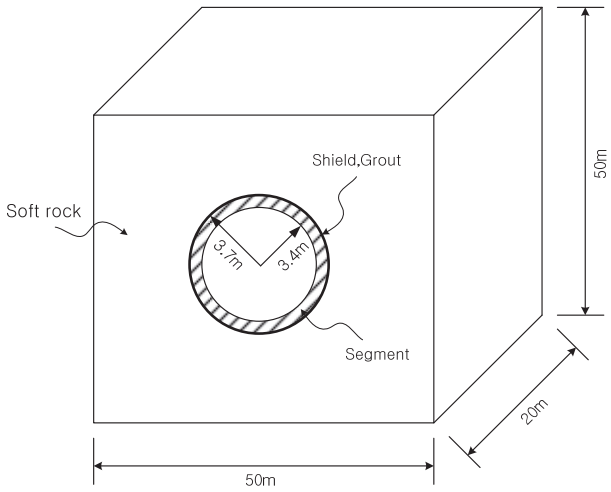

Section 2
Analysis Setting

[Open the attached start file (04_tbm_start)]

∗ : **Analysis > Analysis Case > Setting**

- Set model type, gravity direction and initial parameters, and check the unit system which will apply to the analysis. The unit system can be changed during the modeling process and when checking analysis results. The input parameters are automatically converted by the unit system.
- This tutorial is a 3D model with gravity in Z direction and using SI unit system (kN, m).

▶Setting analysis condition

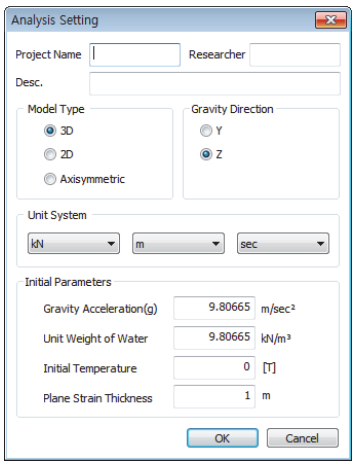

Section 3
Define Material and Property

3.1. Definition of Ground and Structural Materials

Define the soil model type to 'Mohr-Coulomb'. For the structure, 'Elastic' model type which does not consider material nonlinearity is used.
*all these materials have already been defined in the model 04_tbm_start.gts

Ground and structure materials have been defined as below:

▶Table. Ground material

[Unit : kN, m]

Name	Soil	Segment
Material	Isotropic	Isotropic
Model Type	Mohr-Coulomb	Elastic
General		
Elastic Modulus(E)	1.3E+06	2.1E+07
Poisson's Ratio(v)	0.30	0.30
Unit Weight(r)	19	24
Ko	0.5	1
Porous		
Unit Weight(Saturated)	19	24
Initial Void Ratio(e0)	0.5	0.5
Drainage Parameters	Drained	Drained
Non-Linear		
Cohesion(C)	15	-
Frictional Angle	30	-

▶Define ground material - General
▶▶ Define ground material - Porous
▶▶▶ Define ground material – Non-linear

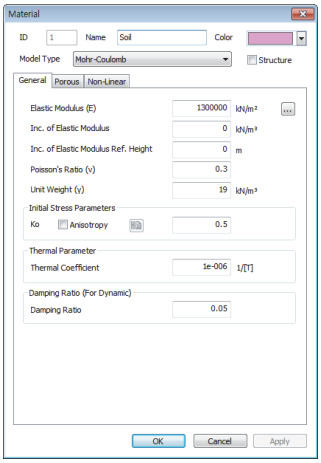

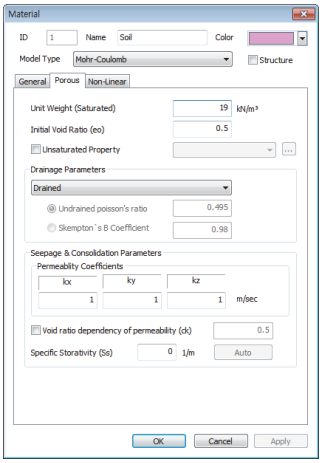

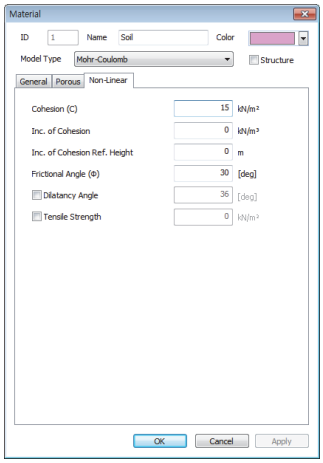

▶Table. Structure material

[Unit : tonf, m]

Name	Steel	Grout
Material	Isotropic	Isotropic
Model Type	Elastic	Elastic
Elastic Modulus(E)	2.5E+08	1.0E+07
Poisson's Ratio(v)	0.2	0.3
Unit Weight(r)	78	22.5

▶Define structure material(Steel)
▶▶ Define structure material(Grout)

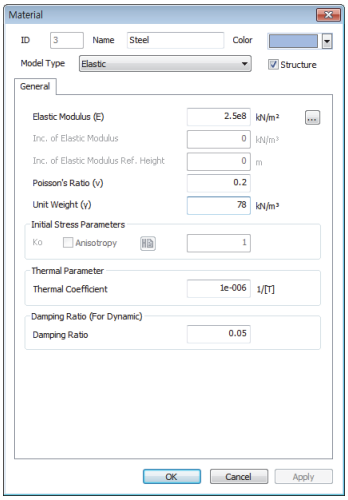

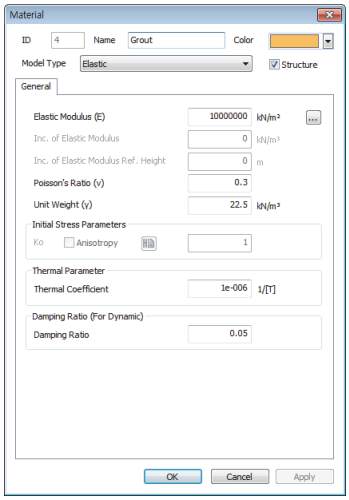

3.2 Definition of Properties

We have to define of properties assigned to each mesh set. When you define ground or structure properties you have to choose materials assigned to each of them.
*all these properties have already been defined in the model 04_tbm_start.gts

The properties for each mesh set have been defined as below:

[Unit : kN, m]

▶Table. Ground property

Name	Soil	Segment	Steel	Grout
Type	3D	3D	2D-Plate	2D-Plate
Material	Soil	Segment	Steel	Grout
Section Size	-	-	TH=0.06	TH=0.06

Section 4
Modeling

The main purpose of this tutorial is the modeling of the Shield TBM, along with Grout elements and the Setting of the construction stages.
Modeling can be started directly from the start file in which the material properties for ground and structure are already set.

4.1. Modeling Geometry

∗ : Geometry > Point & Curve > Rectangle

Create rectangle for ground area.

- Click [Normal] in the view toolbar.
- Check [Make Face] option.
- Type '0, 0' as the start location and press the [Enter] key.
- For the diagonally opposite corner type in '50, 50', then click on [OK].

∗ : Geometry > Point & Curve > Circle

Draw a circle to make tunnel shape.

- Check [Make Face] option.
- Type in '25, 25' for the center location and press the [Enter] key.
- Input radius of '3.4', and select [Apply].
- Type in '25, 25' for center location, Press [Enter] key.
- Input radius of '3.7', and select [OK].

∗ : Geometry > Protrude > Extrude

Make solid by extruding generated shape.

- Select three generated faces.
- Choose the direction as the Y axis (GCS Green).
- Type in '20' in length. Check [Make Solid] option.
- Select [OK].

* : Geometry > Surface & Solid > Auto Connect

This is a process of making a share face between solids.

- Select the three solids generated in the previous step.
- Click on [Ok].
- Change the solid names into 'External circle', 'Internal circle' and 'Ground' in the Work Tree > Geometry by pressing the [F2] key of the keyboard.

▶Geometry modeling

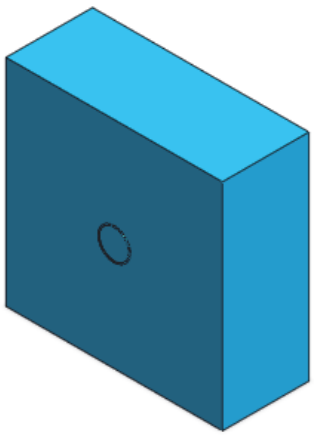

Tip

[Auto Connect] is a function which created automatically the shared face between adjacent solids. It is easy to generate a shared face, when there is a common face or in case where of Boolean Operations are needed between solids. By using this function you can prevent modeling error before generating mesh.

* : Geometry > Point & Curve > Rectangle

Generation of the shield TBM cutting face has to be created first. Please keep in mind that when you divide a solid with a face, the face has to be bigger than the solid so that the geometry Boolean operation can function normally.

- Select View toolbar > Display mode(Geometry) to 'Line'.
- Select [Normal] in the View Toolbar.
- Check [Make Face] option.
- Generate a rectangle(Advance face) which is little bit bigger then tunnel shape.

▶Create face

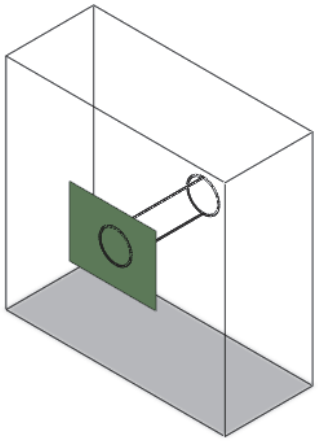

* : Geometry > Transform > Translate

During this process the generated cutting face will be copied along the excavation direction.

- Select the face generated in the precious step.
- Select the Y axis direction.
- Set the [Method] to 'Copy (Uniform)'. And input '1', '19' in [Distance],[Times].
- Click [OK].
- Delete the target object by pressing [Delete] key.

▶Generate advance face

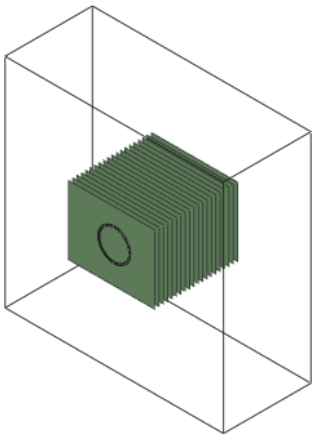

* : Geometry > Divide > Solid

During this process the tunnel is divided by the cutting faces to create the different excavation stages. Nodes have to be shared with adjacent ground solid so please check the [Divide Touching Faced] to divide the faces of the surrounding ground automatically.

- Select the solids 'External circle' and 'Internal circle' as the target objects.
- Change the Select Filter to 'Face' and Select the 19 faces generated in the previous step as the tool surface.
- Check [Divide Touching Faced] option. Select the 'Ground' solid as the adjacent face.
- Click on [OK] button.
- In the View Toolbar, select [Right].
- In the Model Tree > Geometry > Geometry-1, hide the external circle solids to show only internal circle solids and modify those names to align the solids in the right order for excavation using [F2] button.
- In the same way, change the 20 External circle solid names.

▶ Divide solid

▶▶ Divided solid

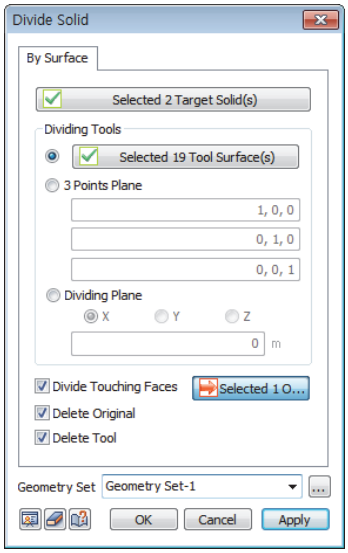

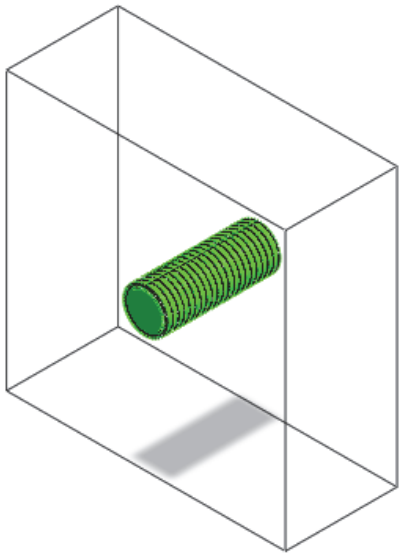

4.2 Generate Mesh

* : Mesh > Control > Size Ctrl.

The mesh size have to be controlled to get a high quality mesh with less number of meshes, this can be done easily using the size control.

- Select [Front] in the View Toolbar.
- Select the edges of 'Internal circle' and 'External circle' solids.
- Choose the method as 'interval length' and enter 1 m for the division.
- Select Preview button to check the generated edge seeds.
- Click on [OK].

▶Set seed size
▶▶Verify seed size

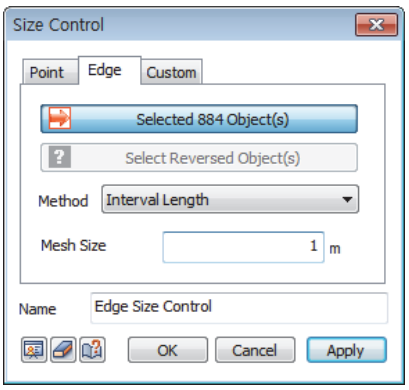

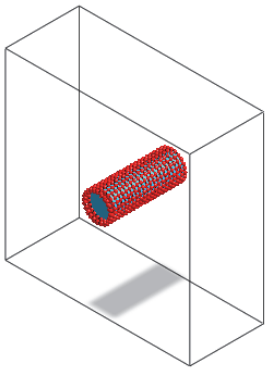

* : Mesh > Generate > 3D

There are three ways of generating 3D meshes which are [Auto-Solid], [Map-Solid] and [2D->3D]. Since [Map-Solid] only generates element by hexahedron shape, it is possible to create meshes only if seed information is corresponding on the different edges. In contrast, in the [Auto-Solid] Tab, 'Tetra Mesher' and the 'Hybrid Mesher' can be chosen for any type of geometry.

- Choose the [Auto-Solid] tab.
- Select the 20 'Internal circle' solids.
- Input mesh size to '1'.
- Select 'Hybrid Mesher (Hexahedron centered)'.
- Check [Match Adjacent Faces].
- Select property as '1: soil' .
- Enter 'Internal circle' as the mesh set name. And select [Apply].
- In the same way, generate mesh set for the 20 'External circle' solids.
- For the 'Ground' solid, set mesh size to '4' and generate the mesh set.

▶External circle mesh set
▶▶Internal circle mesh set
▶▶▶Ground mesh set

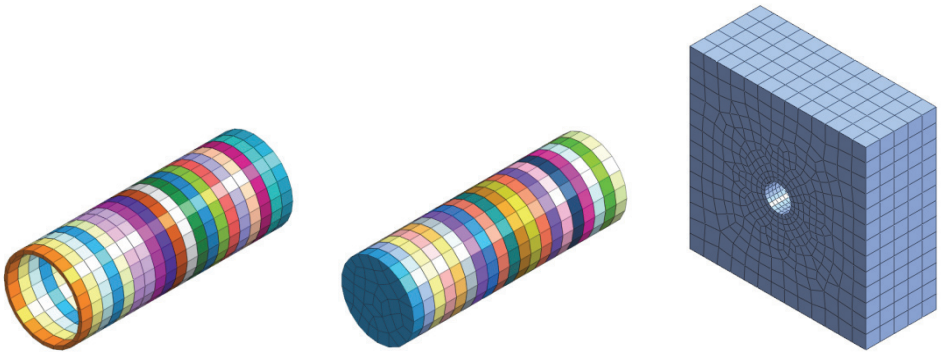

∗ : **Mesh > Element > Extract**

- Hide mesh sets in the work window by unchecking Work Tree > Mesh.
- Activate only the 20 'External circle' solids.
- Select [Front] in the View Toolbar.
- In Mesh > Mesh > element > Extract, select type to 'Face'.
- Select the 200 faces of the 'External circle' mesh sets.
- Set the property to '3:Steel'.
- Enter the mesh set name to 'Shield'.
- Check [Skip Duplicated Faces] and [Register based-on Owner shape] options.
- Click on [OK] button.

▶Extract sub elements

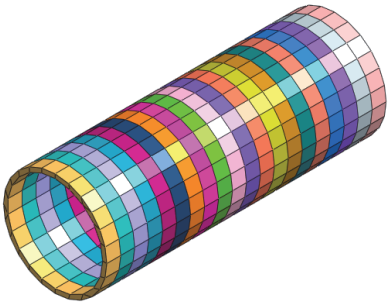

* : Mesh > Element > Delete

Unnecessary elements can be removed using the [Delete] function.

- Select [Right] in the View Toolbar.
- Select elements of the front and back part as the following image.
- Select [Apply].
- Select [Front] in the View Toolbar.
- Select the element of the internal area, and click [OK].(It is easy to select the internal area if you use [Polygon] selection in the Selection Toolbar).

▶Delete unnecessary element(Sides)
▶▶ Delete unnecessary element(Front)

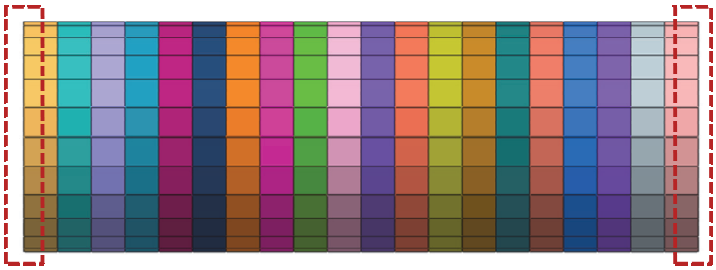

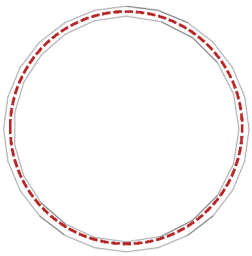

* : Mesh > Mesh Set > Rename

Mesh set name have to be modified to be in accordance with the excavation steps.
In GTS NX, you can easily define construction stages using the [Stage Definition Wizard], but it required to have mesh sets which are well numerated in the excavation order.
First, the mesh set names of the tunnel part have to be modified.

- Select all the 'External circle' meshes in the Work Tree.
- Set the [Sorting Order] to 'Global Rectangular'. And assign 'Y' to [1st].
- Choose 'Ascending order'. Name the mesh sets to 'External circle#' and starting number to 1.
- Select [Apply].
- Select all the 'Internal circle' meshes in the Work Tree.
- Set the [Sorting Order] to 'Global Rectangular'. And assign 'Y' to [1st].
- Choose 'Ascending order'. Name the mesh sets to 'Internal circle#' and starting number to 1.
- Select [Apply].
- Select all the 'Shield' meshes in the Work Tree.
- Set the [Sorting Order] to 'Global Rectangular'. And assign 'Y' to [1st].
- Choose 'Ascending order'. Name the mesh sets to 'Shield#' and starting number to 1.

Section 5
Analysis Setting

5.1 Setting Load Condition

∗ : Static/Slope Analysis > Load > Self Weight

Set a self weight. Gravity is calculated automatically by multiplying the inputted unit weight of the ground and structure and acceleration of gravity. It can be set very easily by inputting Scale factor of direction.

- Set the [Name] to 'Gravity-1' and enter 'Self weight' as the [Load set] name.
- Put -1 for Gz value.
- Click on [OK] button.

∗ : Static/Slope Analysis > Load > Definition Set

Names of load sets have to be defined in advance.

- Click [Add] to define following load set in the table.

HP1	HP2	HP3	HP4	HP5	HP6	HP7	HP8	HP9	
J1	J2	J3	J4	J5	J6	J7	J8	J9	
S1	S2	S3	S4	S5	S6	J7	S8	S9	S10
E1	E2	E3	E4	E5	E6	E7	E8	E9	E10

HP : Drilling pressure(200kN/m^2), J : Jack thrust(4500kN/m^2),
S: Shield external pressure(50kN/m^2), E: Segment external pressure(1000kN/m^2)

∗ : Static/Slope Analysis > Load > Pressure (HP, Drilling pressure)

Drilling pressure of Shield TBM excavation is defined by the following process:

- In the Work Tree > Geometry > Solid, select the internal circle 3, 5, 7, 9, 11, 13, 15, 17, 19 and click [Show only].
- Click [Right] in the View Toolbar.
- Input 'Pressure-1' in [Name].
- Set the Object type to 'Face' and select a face of the front part of the 'Internal circle#-003'.
- Set the direction to 'Y' of [Reference Coordinate system/Global Rectangular].
- Check [Uniformly Distributed load] option and input the load size to '200'.
- Set the load set to 'HP1' and select [Apply].
- In the same way, select the face of internal circle of 5,7,9,11,13,15,17,19, and create 'HP2~HP9' load set.

▶Solids to apply Drilling pressure

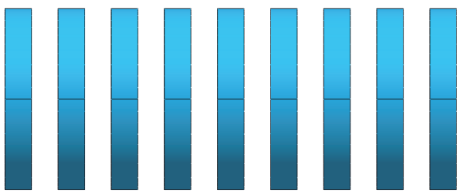

▶▶Apply drilling pressure to each solid

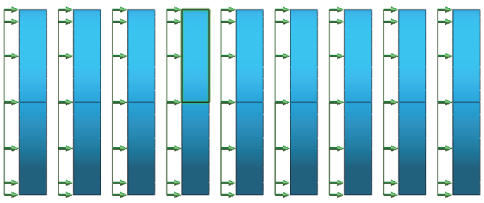

* : Static/Slope Analysis > Load > Pressure (J, Jack thrust)

Jack thrust of Shield TBM excavation is defined by the following process:

- In Work Tree > Geometry > Solid, select external circles 2, 4, 6, 8, 10, 12, 14, 16, 18 and click [Show only].
- Select [Right] in the View Toolbar.
- Input name as 'Pressure-10'.
- Set the object type to 'Face'. Select face of the back part of the 'external circle#-002'.
- Set the direction to 'Y' of [Reference Coordinate system/Global Rectangular].
- Check [Uniformly Distributed load] option and input the load size to '-4500'.
- Set the load set to 'J1' and select [Apply].
- In the same way, select the face of external circle of 4,6,8,10,12,14,16,18, and create 'J2~J9' load set.

▶Solids to apply Jack thrust
▶▶Apply drilling pressure to each solid

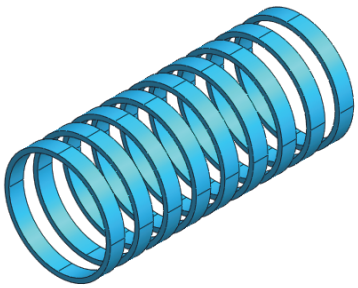

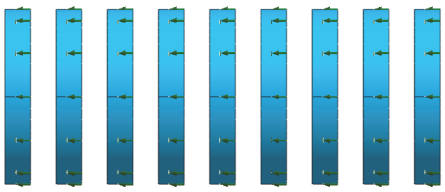

* : Static/Slope Analysis > Load > Pressure (S, Shield external pressure)

Shield external pressure of Shield TBM excavation is defined by the following process:

- In the Work Tree > Geometry > Solid, select all the external circle solids and Click [Show only].
- Input name as 'Pressure-19'.
- Set the object type to 'Face'. Select 8 border faces of external circles 1, 2.
- Set the direction to [Normal].
- Check [Uniformly Distributed load] option and input the load size to '50'.
- Set the load set to 'S1' and select [Apply].
- In the same way, select the border face of external circle 3~20, and create 'S2~S10' load set.

▶Solids to apply shield external pressure
▶▶Apply shield external pressure to each solid

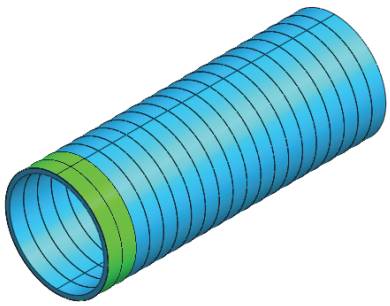

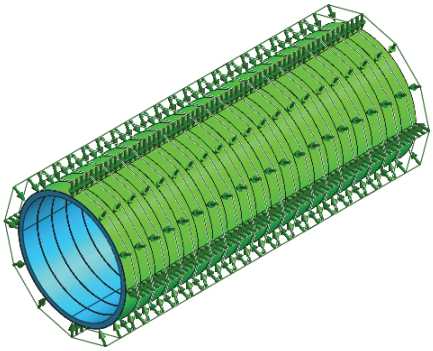

* : Static/Slope Analysis > Load > Pressure (E, Segment external pressure)

Segment external pressure of Shield TBM excavation is defined by the following process:

- In the Work Tree > Geometry > Solid, select all the external circle solids and Click [Show only].
- Input name as 'Pressure-29'.
- Set the object type to 'Face'. Select 8 border faces of external circles 1, 2.
- Set the direction to [Normal].
- Check [Uniformly Distributed load] option and input the load size to '1000'.
- Set the load set to 'E1' and select [Apply].
- In the same way, select the border faces of external circle 3~20, and create 'E2~E10' load set.

▶ Solids to apply segment external pressure
▶▶Apply segment external pressure to each solid

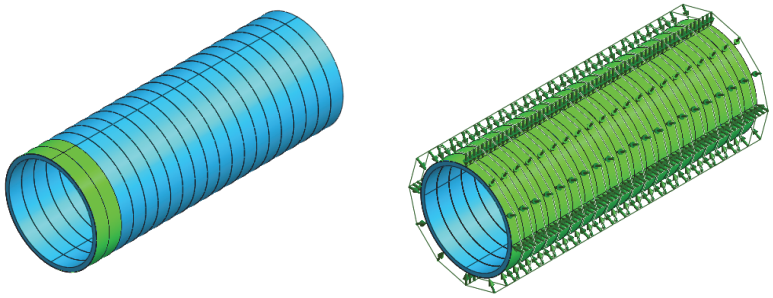

5.2 Setting Boundary Conditions

* : Static/Slope Analysis > Boundary > Constraint

This is the process of setting boundary condition against internal deformation or against rotation based on GCS. At the left/right/bottom part of the model, auto set constraint displacement according to GCS

- In the [Auto] tab, set name and boundary set name.

Tip

In 3D model analysis, constraint displacement applied in x direction left/right, y direction front/back, xyz direction for the bottom part. GTS automatically recognizes the model boundary and sets the boundary condition.

* : Static/Slope Analysis > Boundary > Change Property

Changing property conditions have now to be applied. As the excavation proceeds, the property changes 'external circle mesh(solid) -> Segment mesh(Solid)' and 'Shield mesh(Plate) -> Grout mesh(Plate)'.

- In the [Construction Stage] Tab, select all the external circle mesh set.
- Set the property to '2:Segment'.
- Select [Apply].
- In [Construction Stage] tab, select all the shield mesh set.
- Set the property to '4:Grout'.
- Click on [OK].

5.3 Define Construction Stages

Create the construction stages for simulating Shield TBM excavation as following below. Given tutorial is an example of setting construction stages of excavation at every 2m.

▶Table. Mesh set assigned in each construction stage

Step (Construction stage)	Excavation(Remove element)			Installation(Install element)		
	Internal	Segment	Shield machine	Shield machine	Segment	Grout part
1	-	-	-	Ground, Internal 1~20, External 1~20		
2	Internal 1,2	External 1,2	-	Shield 1,2	-	-
3	Internal 3,4	External 3,4	-	Shield 3,4	-	-
4	Internal 5,6	External 5,6	-	Shield 5,6	-	-
5	Internal 7,8	External 7,8	-	Shield 7,8	External 1,2	-
6	Internal 9,10	External 9,10	Shield 1,2	Shield 9,10	External 3,4	-
7	Internal 11,12	External 11,12	Shield 3,4	Shield 11,12	External 5,6	-
8	Internal 13,14	External 13,14	Shield 5,6	Shield 13,14	External 7,8	-
9	Internal 15,16	External 15,16	Shield 7,8	Shield 15,16	External 9,10	Shield 1,2
10	Internal 17,18	External 17,18	Shield 9,10	Shield 17,18	External 11,12	Shield 3,4
11	Internal 19,20	External 19,20	Shield 11,12	Shield 19,20	External 13,14	Shield 5,6
12	-	-	Shield 13,14	-	External 15,16	Shield 7,8
13	-	-	Shield 15,16	-	External 17,18	Shield 9,10
14	-	-	Shield 17,18	-	External 19,20	Shield 11,12
15	-	-	Shield 19,20	-	-	Shield 13,14
16	-	-	-	-	-	Shield 15,16
17	-	-	-	-	-	Shield 17,18
18	-	-	-	-	-	Shield 19,20
Reference (Element type)	Solid	Solid	Plate	Plate	Solid	Plate

▶Table. Load condition of each construction stage

Step (Construction stage)	Loading				Remove loading
	Face Pressure (TBM Head excavation side)	Upper shield Pressure	Upper segment Pressure	Jack Forces (Segment)	Jack Forces (Segment)
1	-	-	-	-	-
2	HP1 (Internal3 front Face)	S1 (External 1,2 pressure)	-	-	-
3	HP2 (Internal 5 front Face)	S2 (External 3,4 pressure)	-	-	-
4	HP3 (Internal 7 front Face)	S3 (External 5,6 pressure)	-	-	-
5	HP4 (Internal 9 front Face)	S4 (External 7,8 pressure)	-	J1(External 2)	-
6	HP5 (Internal 11 front Face)	S5 (External 9,10 pressure)	E1 (External 1,2 pressure)	J2(External 4)	J1 (External 2)
7	HP6 (Internal 13 front Face)	S6 (External 11,12 pressure)	E2 (External 3,4 pressure)	J3(External 6)	J2 (External 4)
8	HP7 (Internal 15 front Face)	S7 (External 13,14 pressure)	E3 (External 5,6 pressure)	J4(External 8)	J3 (External 6)
9	HP8 (Internal 17 front Face)	S8 (External 15,16 pressure)	E4 (External 7,8 pressure)	J5(External 10)	J4 (External 8)
10	HP9 (Internal 19 front Face)	S9 (External 17,18 pressure)	E5 (External 9,10 pressure)	J6(External 12)	J5 (External 10)
11	-	S10 (External 19,20 pressure)	E6 (External 11,12 pressure)	J7(External 14)	J6 (External 12)
12	-	-	E7 (External 13,14 pressure)	J8(External 16)	J7 (External 14)
13	-	-	E8 (External 15,16 pressure)	J9(External 18)	J8 (External 16)
14	-	-	E9 (External 17,18 pressure)	-	J9 (External 18)
15	-	-	E10 (External 19,20 pressure)	-	-
16	-	-	-	-	-
17	-	-	-	-	-
18	-	-	-	-	-
Reference (Element type)	200kN/m^2	50kN/m^2	1000kN/m^2	4500kN/m^2	

▶Table. Boundary condition of each construction stage

Step (Construction stage)	Boundary Condition		
	Displacement boundary condition	Change segment property (Change external property)	Change grout property (Change shield property)
1	Constraint foundation displacement	-	-
2	-	-	-
3	-	-	-
4	-	-	-
5	-	Segment 1,2	-
6	-	Segment 3,4	-
7	-	Segment 5,6	-
8	-	Segment 7,8	-
9	-	Segment 9,10	Grout 1,2
10	-	Segment 11,12	Grout 3,4
11	-	Segment 13,14	Grout 5,6
12	-	Segment 15,16	Grout 7,8
13	-	Segment 17,18	Grout 9,10
14	-	Segment 19,20	Grout 11,12
15	-	-	Grout 13,14
16	-	-	Grout 15,16
17	-	-	Grout 17,18
18	-	-	Grout 19,20
Reference (Element type)			

* : Static/Slope Analysis > Construction Stage > Stage Set

There is Stress, Seepage, Stress-Seepage-Slope, Consolidation, and Fully Coupled Stress Seepage for the stage type. For this model, set the stage type to 'Stress'.

- Name 'TBM' and set stage type to 'Stress'.
- Select [Add] button to create construction stage, and select [Close].

▶Construction stage set

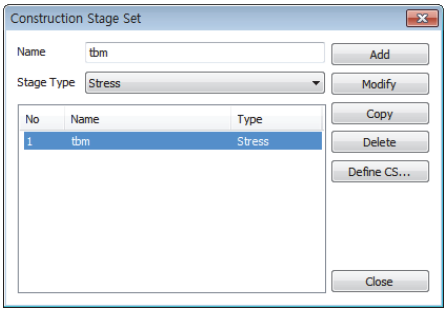

* : Static/Slope Analysis > Construction Stage > Stage Wizard

Define construction stage set. It is easy to define Construction stage in GTS NX if the add/delete element is repeated uniformly. To define construction stage by using Stage definition wizard, regular numbering (postfix) for each set has to be assigned.

- Select set type to 'Mesh set' in the [Set Assignment Rules].
- Select 'Internal circle#-' in the [Set Name Prefix].
- Select 'R' in the [A/R].
- Enter '1' in [Start Postfix]. Enter '2' in [End Postfix].
- Enter '1' in both [Start Stage] and [Stage Inc.].
- Assign the rest as following below.
- Select [Apply Assignment Rules].
- Select 'Internal circle#-', 'External circle#-','Ground', 'Default Mesh set', 'Boundary set-', and 'Self weight'.
- Drag selected items of mesh, boundary, and load into the [I.S] row of [Activation Status].

▶Stage definition wizard

Set Type	Set Name Prefix	A/R	Start Postfix	F	End Postfix	Postfix Inc.	Start Stage	Stage Inc.
Mesh	Internal#-	R	1	0		2	1	1
Mesh	Internal#-	R	2	0		2	1	1
Mesh	External#-	R	1	0		2	1	1
Mesh	External#-	R	2	0		2	1	1
Mesh	Shield#-	R	1	0		2	5	1
Mesh	Shield#-	R	2	0		2	5	1
Mesh	Shield#-	A	1	0		2	1	1
Mesh	Shield#-	A	2	0		2	1	1
Mesh	External#-	A	1	0		2	4	1
Mesh	External#-	A	2	0		2	4	1
Mesh	Shield#-	A	1	0		2	8	1
Mesh	Shield#-	A	2	0		2	8	1
Load	HP	A	1	0		1	1	1
Load	S	A	1	0		1	1	1
Load	E	A	1	0		1	5	1
Load	J	A	1	0		1	4	1
Load	J	R	1	0		1	5	1
Boundary	External#-	A	1	0		2	4	1
Boundary	External#-	A	2	0		2	4	1
Boundary	Shield#-	A	1	0		2	8	1
Boundary	Shield#-	A	2	0		2	8	1

▶Stage definition wizard

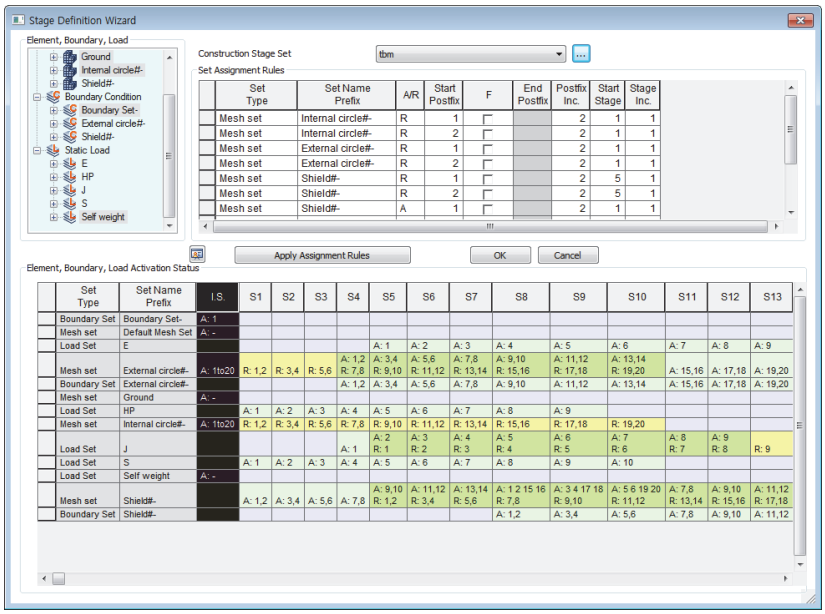

* : Static/Slope Analysis > Construction Stage > Stage Set

Stages which are generated by the Stage definition wizard need to be verified to ensure the good assignment of all the conditions.
In the [Define Construction Stage] menu, you can get more detailed options (LDF etc.) than thus available in the [Stage Definition Wizard]. So in case of complicated model, it is comfortable to use the [Stage Definition Ward] to generate the framework of entire construction stage. If there is an individual option to be added, use [Define construction stage] menu to set the option for each construction stage.

- Click [Stage ID], and select '1:I.S.'.
- Check [Clear Displacement].
- Select [Save]. and select [Close].

5.4 Setting Analysis Case

* : Analysis > Analysis Case > General

Now the setting data of the model for the analysis need to be defined for analysis. You can control analysis and output type in the advance options. In the construction analysis, the data for the each stage is set. So [Analysis Case Model] is deactivated.

- Set name to 'TBM Analysis'.
- Select [Solution Type] to 'Construction Stage', and [Construction Stage Set] to 'TBM'.
- Analysis Control > General tab, Check [Initial Stage for Stress Analysis] and select '1:I.S.
- Click on [OK] button.
- Click again on [OK] button.

5.5 Perform Analysis

∗ : Analysis > Analysis > Perform

After the analysis is done, the software automatically switches to [Post-Mode](checking results). To modify model and option after the analysis, you have to switch back to the [Pre-Mode].

- Perform analysis.

Tip

The information occurring from the analysis process is printed out in the [Output Window]. Especially if some warning occurs, be aware that the results may not be normal.
Before generating analysis the model is automatically saved. The information about analysis is saved in *.OUT file as text file format in the same file with the saved model file.
When analyzing a model, the results can be controlled by Analysis > Analysis Case > General > Output Control option. And if you set the output option as [Binary and Text], the results of nodes and elements after the analysis are also plotted in *.OUT file.

Section 6
Results and Generate Reports

You can verify displacement, stress, member force etc. in the Result Tree after the analysis. All the results are plotted as contour, table, and graph. In this tutorial, the main result items which need to be checked are as following below.

- Tunnel displacement-Crown displacement, total displacement.
- Verify generated displacement and stress of Shield/Segment

6.1 Verify Displacement

Verify by 'Displacement' of the work tree after the analysis. TX, TY, TZ is direction of displacement base on X, Y, Z. Since gravity direction of this model is Z direction, tunnel crown displacement is shown in TZ TRANSLATION, and tunnel internal displacement can be verified in TX TRANSLATION, TY TRANSLATION. '(V)' refers to the result item which can represent both contour and vector at the same time. In GTS NX, it is possible to show contour/vector simultaneously about displacement and principal stress.

- Select a stage (S17) to check the result in the Work Tree > Results > TBM Analysis, select Displacement > TZ TRANSLATION(V).

- Select [Front] in View Toolbar. And verify the result in front view.

▶Crown displacement (Isometric1)
▶▶Crown displacement (Front view)

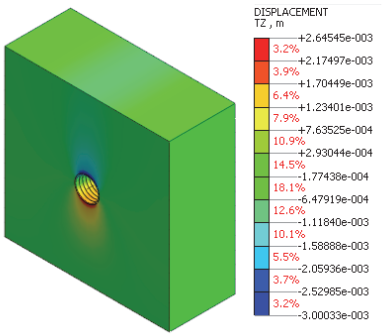

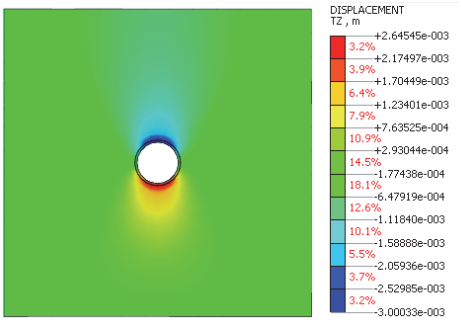

- Click Result > Advance > Probe to see the value of selected node. By this function you can find the location of maximum, minimum.

▶Probe

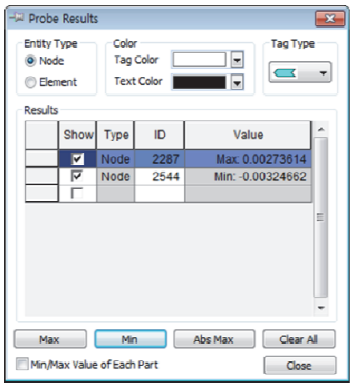

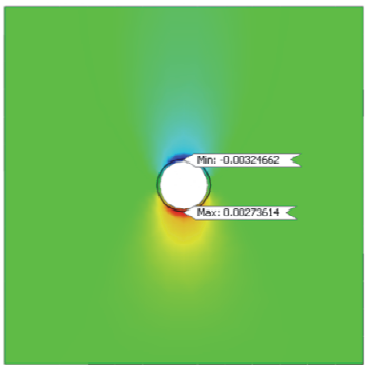

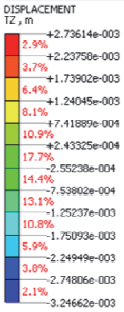

- By moving the simulation bar at the bottom of the work window, it is possible to see the changing settlement of each construction.

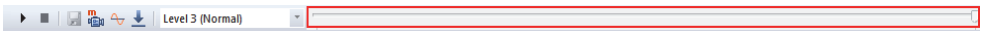

- Select the stage(S17) in the Work Tree > Results > TBM Analysis, and select Displacement > TOTAL TRANSLATION(V) to see the results of displacement. Select Result > General > Contour > Fringe. It is more convenient to see the results if you activate the contour lines.

▶Total displacement
▶▶Show contour line

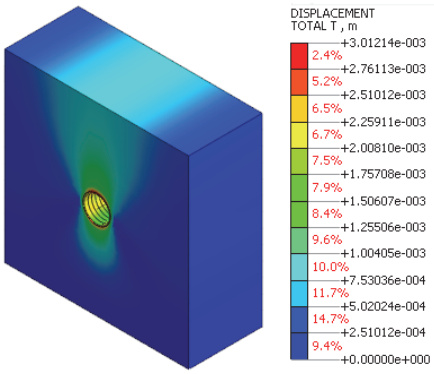

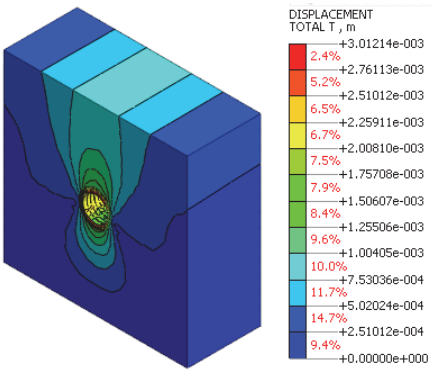

6.2 Segment/Shield Stress

The Segment stress can be verified by 'Solid Stresses' in the Results Tree. S-XX, S-YY, S-ZZ represent the stresses in each direction. You can see the maximum principal stresses in 'S-PRINCIPAL A (V)', and minimum principal stress in 'S-PRINCIPAL C (V)'.

- Activate only the External Circle Mesh Set in the Work Tree > Model > Mesh > External circle#
- Select the stage(S17) in the Work Tree > Results > TBM Analysis, and select the Solid Stresses > S-PRINCIPAL A(V), S-PRINCIPAL C(V) to verify the maximum principal stresses and minimum principal stresses. To see the results with perspective view, select [Perspective View].

▶Maximum principal stress(Segment)
▶▶Minimum principal stress (Segment)

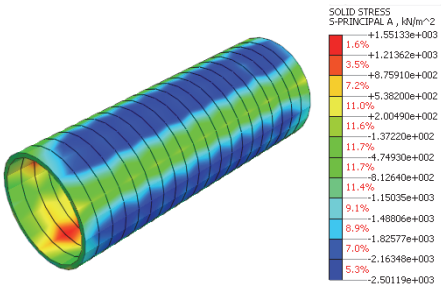

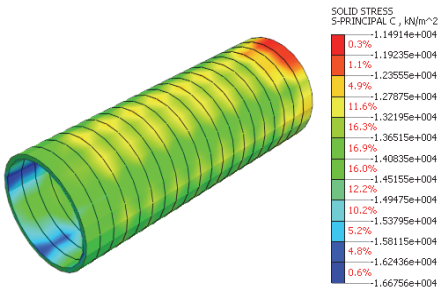

It is possible to see the stress generation of the shield in 'Shell Element Stresses' in Result Tree. Since the shell element is a plate element which has a thickness, its results are plotted in TOP, MID, BOTTOM of the plate. The results come out according to the coordinate system set defined in the Prop./CSys./Func. > Property.

- Activate only the Shield Mesh Set Work Tree > Model > Mesh > Shield#
- Select the stage (S17) in the Work Tree > Results > TBM Analysis, and select Shell Element Stresses > S-MAJOR PRINCIPAL TOP (V), S-MINOR PRINCIPAL TOP (V) to verify maximum principal stress and minimum principal stress.

▶ Maximum principal stress(Shield)

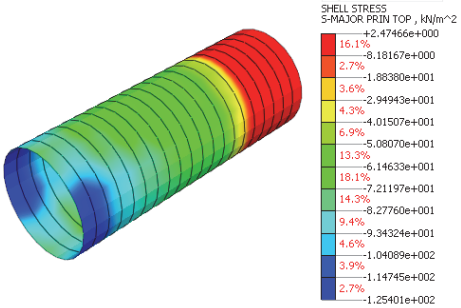
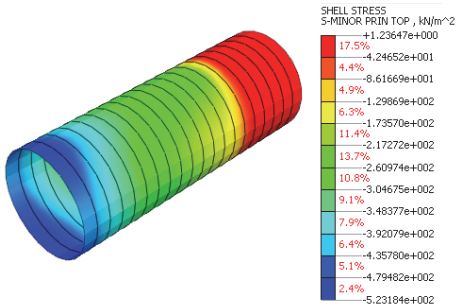
▶▶Minimum principal stress (Shield)